CONTENTS

Group TRA: Technical Instructions, Accessories

REPAIR INSTRUCTIONS FOR THE WEBASTO HEATING AND VENTILATING UNIT P1018

General

To inspect the Webasto auxiliary heater P 1018, use a voltmeter calibrated to 0-5 volts and 0-15 volts.

Maintenance

Prior to the cold season, check the glow plug and banjo union at the burner and remove carbon deposits. Check the voltage at the glow plug which must read between 3.8 and 4.5 volts. In addition, clean the fuel jet and check all wire connections. Finally inspect the heater unit, the mixture pump, the fuel / air regulating unit and all connecting hoses for defects.

Important

If the heater operates satisfactorily with the engine running, but fails when the engine is turned off (ignition key in ignition on or radio on position) do not attempt to remedy the fault by removing the blocking diode at the heater control switch. First check that the glow plug is obtaining a minimum of 3.8 volts. If it is not then possible causes may be: loose or corroded wire connections, causing excessive current resistance, an incorrectly connected series resistor or a weak battery. With the heater turned on, battery voltage must be at least 12.2.volts.

Note

If the voltage at the glow plug is below 3.8 volts and the wire connections are correct and the battery is properly charged, it is likely that a series resistor of the earlier type having a single terminal band is fitted. It is then necessary to install another band (Part No. 901.572.973.00) for terminal G 4.

Visual inspection using adequate lighting will help to ascertain whether an old series resistor (1 terminal band) or a new series resistor (2 terminal bands) is installed.

The old series resistor can be modified by following the procedure below:

1. Remove heater unit.
2. Remove series resistor.
3. Unscrew metal shielding from series resistor.
4. Install second terminal band and adjust to the specifications given in the section describing the series resistor. Also adjust terminal band G 1 to specifications.
5. Connect white wire to the new terminal band G 4.
6. Fit metal shielding.
7. Reinstall series resistor.
8. Reinstall heater unit.

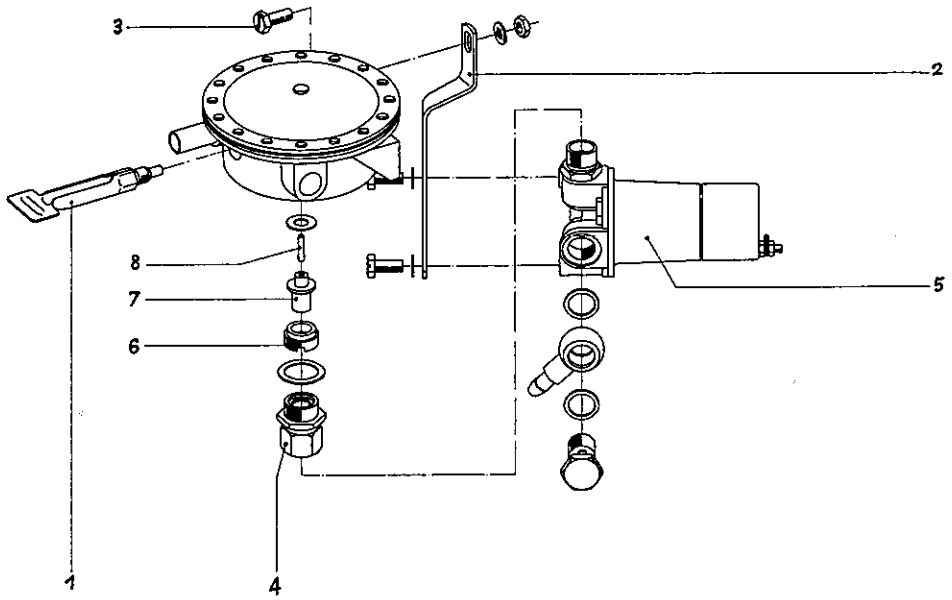

1. Unscrew fuel jet.

2. Remove brace (2) from regulating unit by removing hexagon screw (3).

3. Remove regulating unit from fuel pump by undoing union (4) from fuel pump union, using two open-ended wrenches. The regulating unit and the fuel pump are separate assemblies.

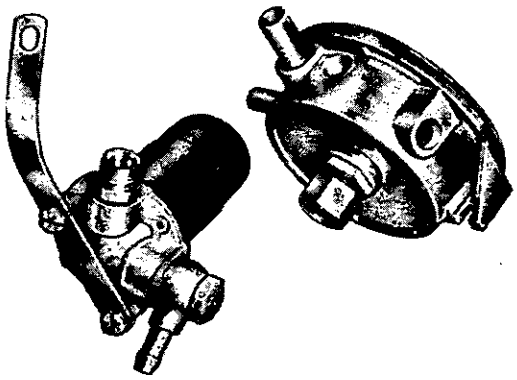

4. Remove union (4), thus exposing screen.

5. After removing the threaded ring insert (6), the metering valve (7) can be removed by holding the regulating unit with its orifice facing down, otherwise the valve rod (8) may easily be mislaid.

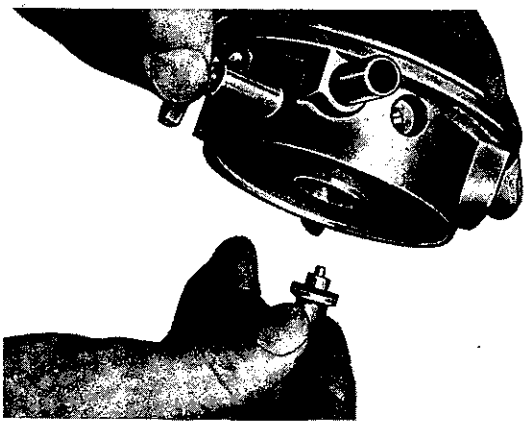

Note

The metering valve cannot be repaired. It must be replaced as a complete assembly.

Before assembling, check all components to the specifications given in the respective sections.

When assembling, please proceed in the reverse order of disassembly.

Removing and Installing Heater Unit

Removal

1. Place car on dolly.
2. Disconnect the ground lead from the battery.
3. Remove luggage compartment carpet.
4. Open heater compartment.
5. Loosen the hot air hose clip at the heater unit and remove hose.

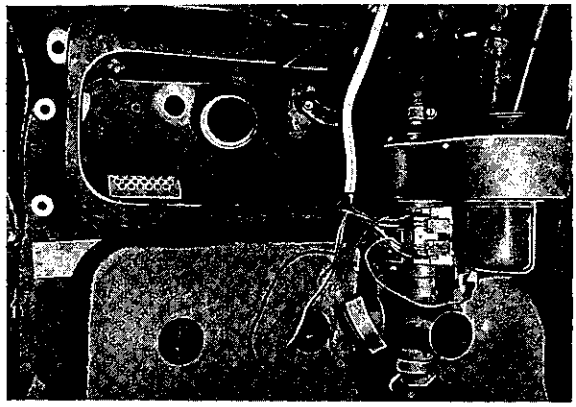

6. Remove the three bolts at the mixture pump bracket and take off pump. Remove clips and disconnect mixture hoses and wire connections from pump.
7. Loosen front clamp at the exhaust muffler. Disconnect exhaust pipe and bend downward out of the way.

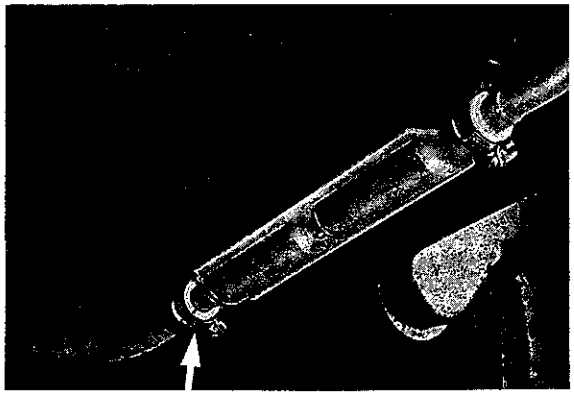

8. Remove clamp and slide white collar onto the heater unit. Disconnect the series resistor negative terminal at the glow plug. Remove all wires at the series resistor.
9. Carefully lift out heater unit.
10. Remove protective cover and disconnect wires at the terminal block.

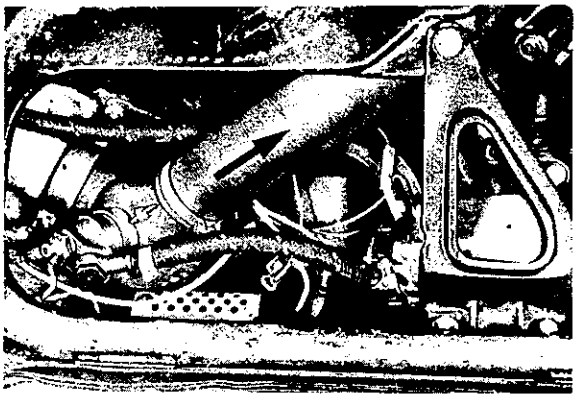

Installation

Follow the above procedure in reverse order.

Caution!

Care should be taken to connect the wires properly. Slightly coat inside of rubber seal facing tunnel with brake cylinder grease.

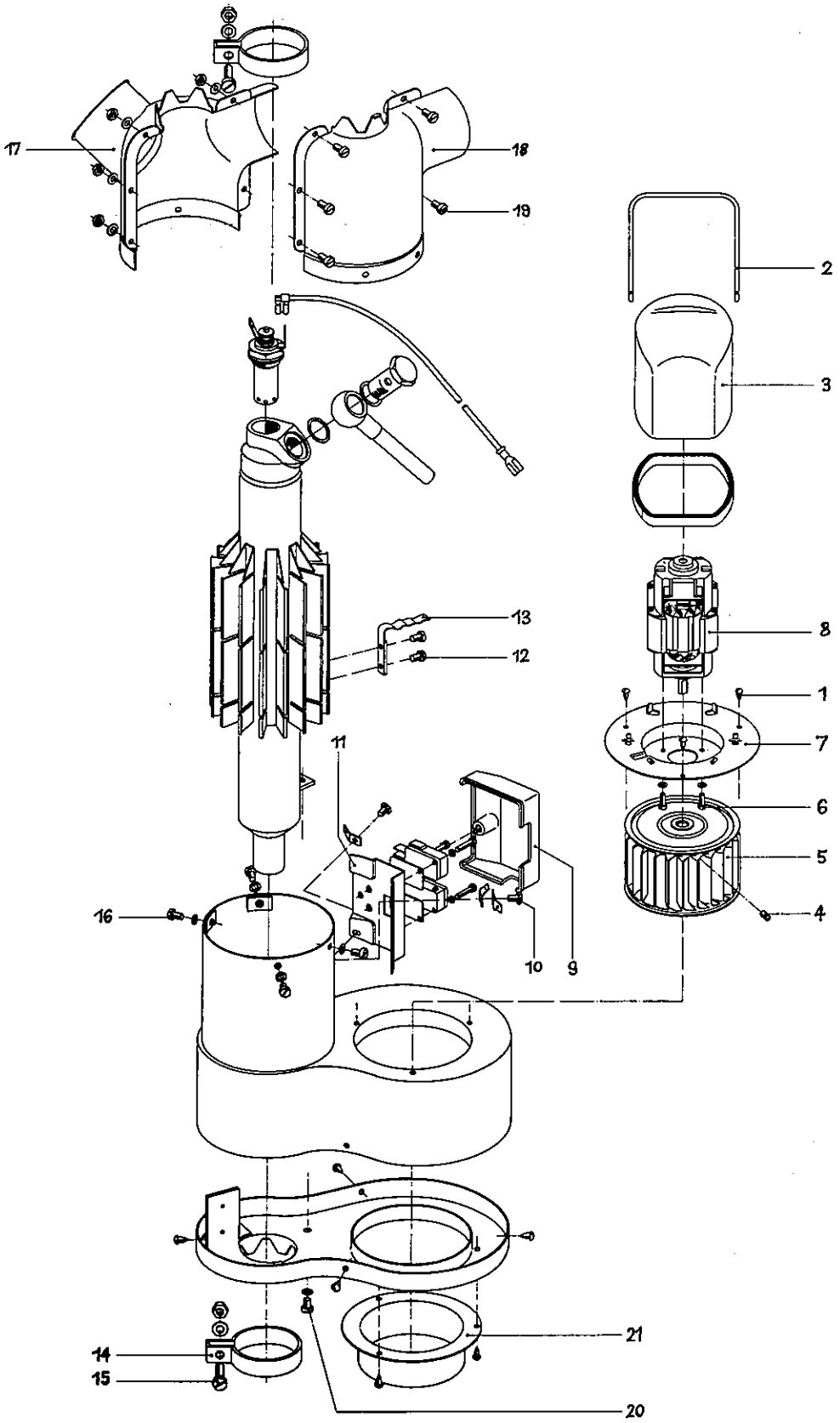

TRA 4

Disassembling the Heater Unit

Oval-shaped blower motor with field winding

1. Unscrew three round-head screws (1) at the housing and withdraw blower.

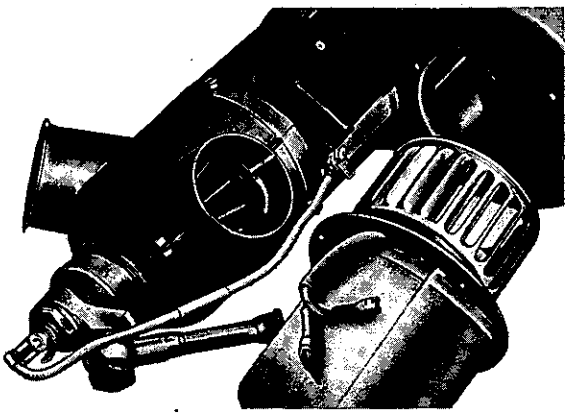

2. Press securing strap (2) aside and remove protective cover (3).

3. Remove setscrew (4) and slide impeller (5) off the motor spindle.

4. Remove four cheese-head screws (6) and remove mounting flange (7) from the motor (8).

Round-shaped motor with oxide magnets

1. Disconnect wires at the motor.

2. Remove protective cap from glow plug control switch and overheat switch.

3. Remove three round-head screws at the housing and withdraw blower.

4. Remove setscrew and slide impeller off the motor spindle.

5. Press securing strap aside and remove protective cover.

Glow Plug Control Switch and Overheat Switch

1. Remove protective cap (9).

2. Remove two hexagon screws (10) and mounting plate (11) incorporating the micro switches.

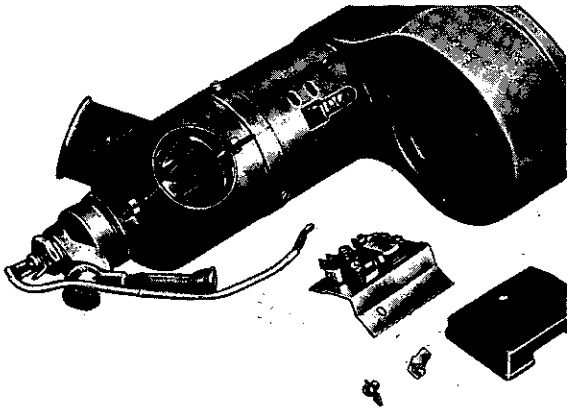

3. Remove two cheese-head screws (12) and take off bimetal spring (13).

Heat Exchanger

1. Loosen clip (14) at the exhaust side by removing screw (15). Remove clip at burner side.

2. Remove four cheese-head screws (16) on the periphery of the cylindrical housing.

3. After removal of five cheese-head screws (19), the two halfs of the hot air distributor duct (17 and 18) can be separated and removed.

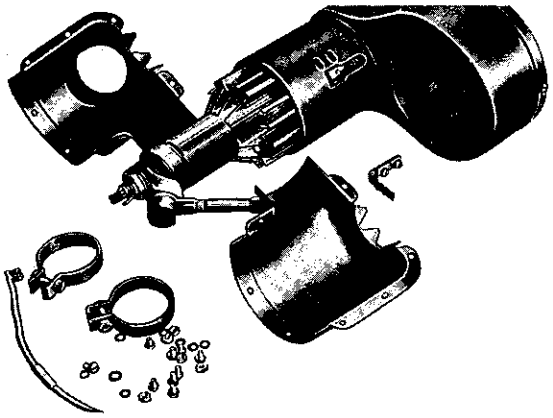

4. Remove cheese-head screw (20) at the front of the housing near the air inlet pipe connection (21). Withdraw the heat exchanger tube from the housing.

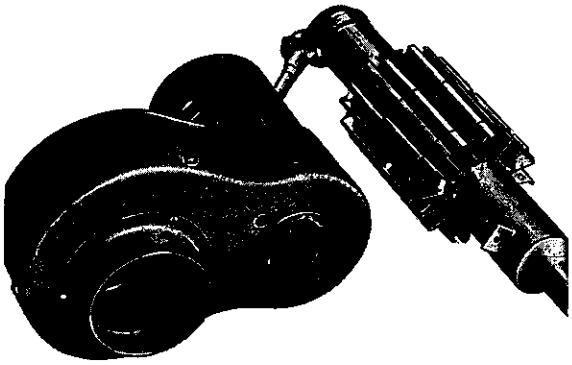

Assembling the Heater Unit

Before assembling, check all components to the specifications given in the respective sections.

When assembling, proceed in reverse order of disassembly, observing the following points:

1. The impeller hub of the oval-shaped motor with field winding must be flush with the motor spindle end. The impeller hub of the round-shaped motor having oxide magnets must be 7 mm clear of the motor spindle end. The dowel pin must point to the flat portion of the motor stub shaft.

2. When positioning the protective cover, place the motor wires in the recess provided in the motor mount (only for motor having field winding).

3. After assembling the unit, adjust the micro switches in relation to the bimetal spring. See section describing glow plug control and overheat switches.

HEAT EXCHANGER

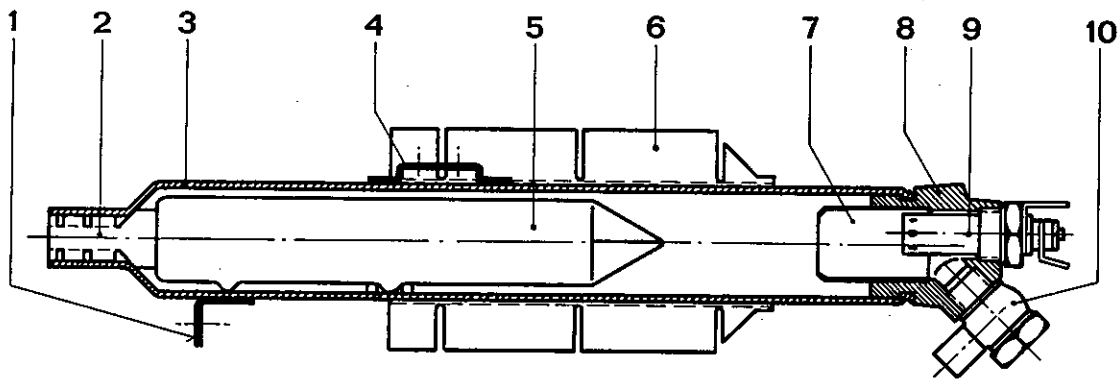

1 - bracket
2 - exhaust pipe
3 - steel tube
4 - bracket
5 - distributor cone
6 - heat exchanger fins
7 - combustion chamber
8 - burner
9 - glow plug
10 - banjo union

The heat exchanger is made of seamless steel tubing (3) 2 mm thick. Copper fins (6) are used to transfer the heat and, together with a bimetal spring (4), are brazed to the periphery of the tube. The burner (8) accommodating the combustion chamber (7) incorporates the glow plug (9) and banjo union with banjo pin (10). The heat exchanger tube houses a distributor cone (5) which forces the heated air to the tube walls and to the exhaust pipe (2). The heat exchanger tube is secured to the housing by means of a bracket (1).

Inspecting the Heat Exchanger

After approx. 1 000 operating hours, clean the exchanger unit with compressed air. A defective heat exchanger must be replaced.

Cleaning Banjo Union and Banjo Bolt

Prior to the cold season, check these two parts for excessive carbon deposits. Remove banjo pin and clean carbon from both components. Do not remove or bend the swirl vane incorporated in the banjo pin. When assembling these parts, use new copper-asbestos gaskets.

Checking Glow Plug

Remove glow plug and check with a power source of 4 volts (2 battery cells) for correct current flow. Glow plug element must be light-red hot within 7 seconds. Carefully remove carbon deposits from the plug. If necessary, replace with BERU 129 G 4-volt glow plug only.

GLOW PLUG CONTROL SWITCH AND OVERHEAT SWITCH

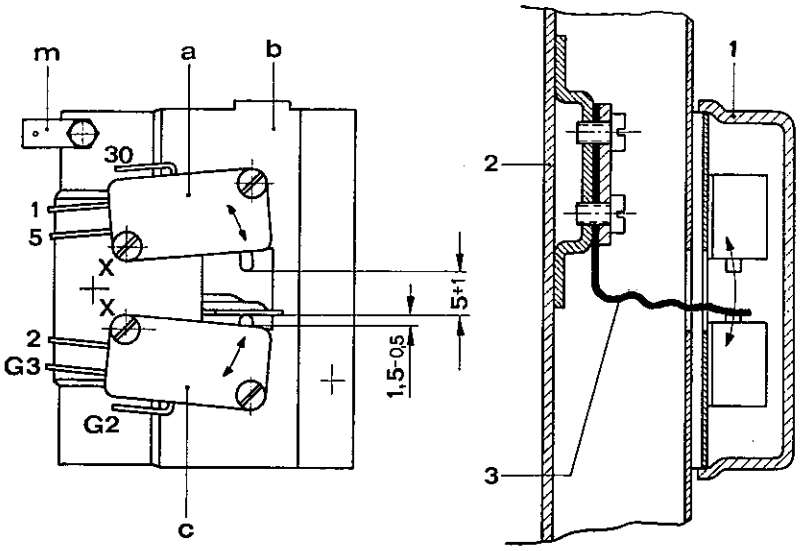

a = overheat switch
b = mounting plate
c = glow plug control switch (black)
m = ground connection

1 = protective cap
2 = heat exchanger tube
3 = bimetal spring

Both switches, which are calibrated in relation to the bimetal spring, are attached to a common mounting plate which is bolted to the housing. The glow switch controls the preheat cycle of the glow plug and is dependent on the temperature of the heat exchanger tube.
The overheat switch turns the heater off if the heat exchanger exceeds a safe maximum temperature.

Checking and Adjusting

Check for correct current flow. When plungers are depressed a definite "click" should clearly be heard. Prior to mounting the plate, be sure that the bimetal spring is properly secured to the exchanger tube and is not fouled by the mounting plate.
Setting of the switches must be done when the heater unit is cold (approx. 68° F or 20° C). Tighten the mounting bolts halfway, turn the switches around point "X" and adjust to specifications shown in the above sketch. Then tighten the mounting bolts fully and screw on protective cap. A wiring diagram is shown on the inside of the protective cap.

SERIES RESISTOR

The series resistor reduces battery voltage to the desired glow plug voltage of 3.8 to 4.5 volts. It has two terminal bands. In the preheat cycle, current flows through a bimetal spring in the time regulator (resistance = 0.22 ohm), through terminal G 1 to resistor terminal G 4 (0.5 ohm) and on to the glow plug. During the secondary glowing cycle, current flows through the glow plug control switch, through terminal G 3 to resistor terminal G 4 (0.72 ohm) and on to the glow plug. Only a properly adjusted resistor will ensure correct functioning of the time regulator and the glow plug which in turn determine satisfactory heater operation

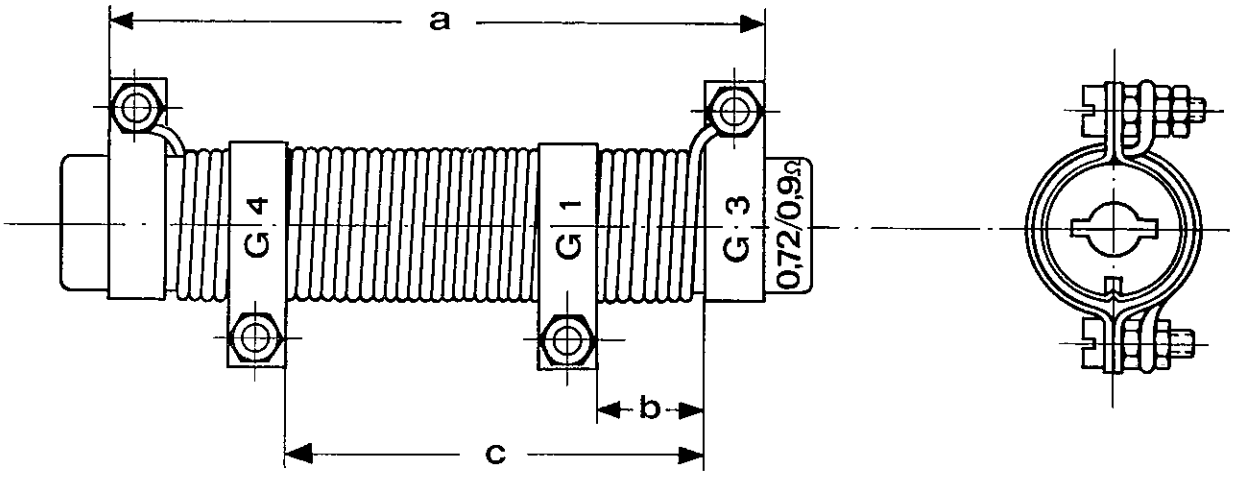

Checking and Adjusting Resistor

Resistance can best be checked and adjusted with the aid of an ohmmeter. If there is no test equipment available, resistance may be checked and / or adjusted to the following specifications:

Distance a:	not exceeding 3.34 in. (85 mm)
Distance b:	approx. 0.55 in. (14 mm) = 0.22 ohm
Distance c:	approx. 2.16 in. (55 mm) = 0.72 ohm

TIME REGULATOR

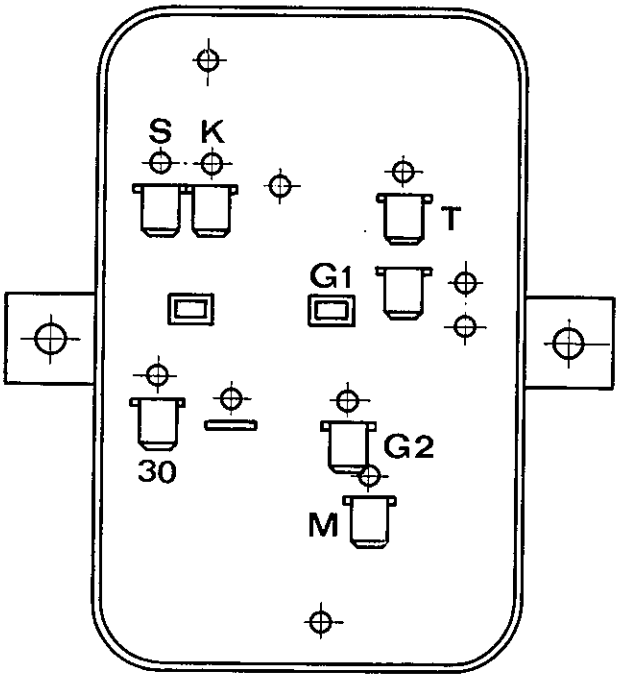

Plug-in Connections	Lead Wire
S	black
K	-
30	purple
T	brown
M	black / red
G 2	green
G 1	yellow

In positions II and III the heater is controlled by the time regulator. It consists of a relay which completes the main battery to heater electrical circuit and of two time micro switches. The main function of the time regulator is to start the preheat cycle prior to the operation of the mixture pump when the heater is turned on either manually or automatically. The mixture pump commences to operate 20 seconds after the start of the preheat cycle.
This timing can only be maintained, if:

1. The glow plug connected to terminal G 1 has a voltage of 3.8 to 4.5 volts.

2. An interval of 2 minutes is allowed before restarting the heater.

Checking the Time Regulator

As installed (cold heater unit):
When the heater is turned on, terminals S, 30 and G 1 must be energized. After approx. 20 seconds, terminal M should also become energized. There will then be a simultaneous "click" as the mixture pump starts to operate.

As removed:

There should be no internal contact between terminal 30 and terminals M, G 2 and G 1. Otherwise the time regulator must be replaced as a complete assembly. Do not repair!

THERMOSTAT

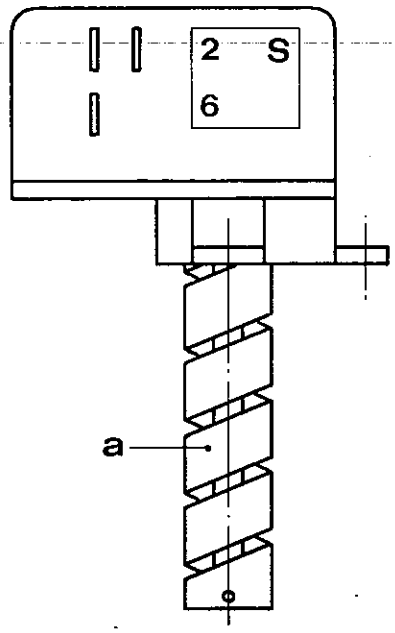

Plug-in Connections	Lead Wire
2	blue
S	black
6	white / red

a = Temperature Sensor

The thermostat regulates hot air temperature within a predetermined range of 167° F to 122° F (75 to 50° C). Hot air from the auxiliary heater and engine heater is blown against the thermostat. If the temperature exceeds or falls short of the thermostat setting, the heater unit is turned off or on automatically.

Inspection:

Do not twist the temperature sensor. When the heater unit is cold (below 104° F or 40° C) there must be internal contact between the plug connectors (6) and (S). When the heater unit is warm (above 167°F or 75° C) internal contact must exist between the plug connectors (6) and (2). To check the thermostat for proper operation, submerge it in heated oil (complete with its temperature sensor) and observe oil temperature with a thermometer. Before installing the thermostat, clean it thoroughly so as to prevent the generation of oil fumes. If the mechanism does not work in the above order, the thermostat must be replaced as an assembly. Do not repair!

FUEL PUMP

Supplied by Messrs. HARDI, Model E 57

Lift approx. 3.3 ft. (1m)

Pressure approx. 1.42 psi (0.1 kp / cm^2)

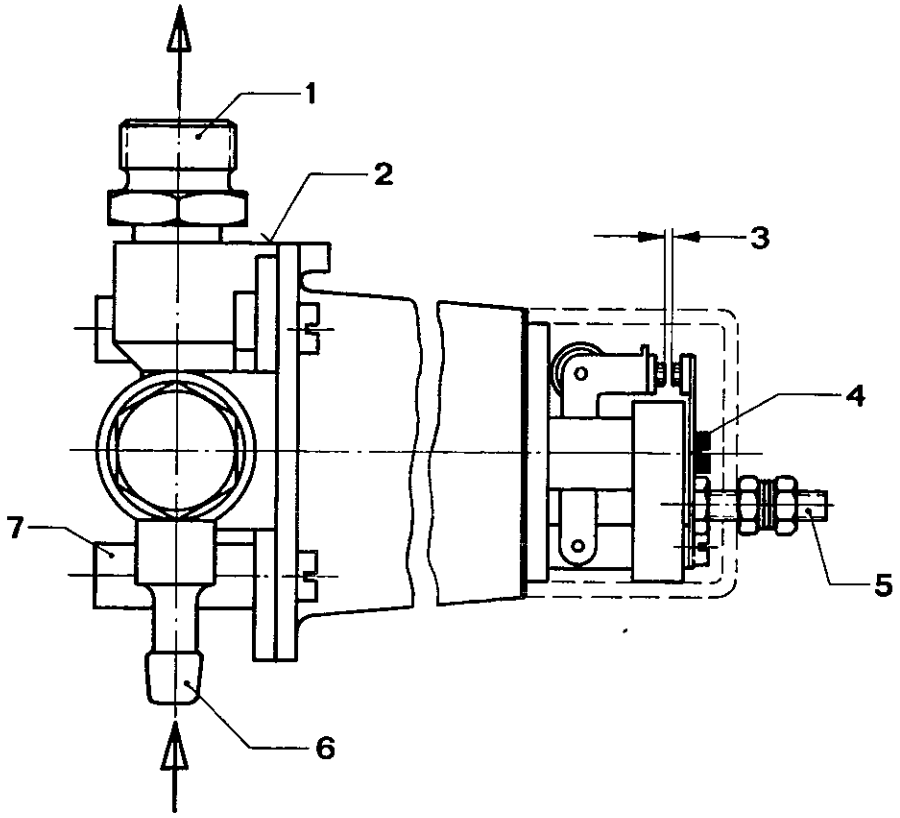

1 = regulating unit fitting union
2 = operating voltage
3 = contact gap (0.039 in. / 1 mm), press contact against pumpbody
4 = contact adjusting screw
5 = positive terminal
6 = connection from fuel tank
7 = negative terminal (proper ground connection must be ensured)

Fuel from the fuel tank is supplied by means of a hose to the pump which in turn feeds fuel to the regulating unit. The pump mus be mounted horizontally with the regulating unit up.

Checking Fuel Pump:

Clean contact points, check for clearance in accordance with sketch and adjust if necessary. Check line connection for leaks. Replace seals, if necessary.

FUEL / AIR REGULATING UNIT

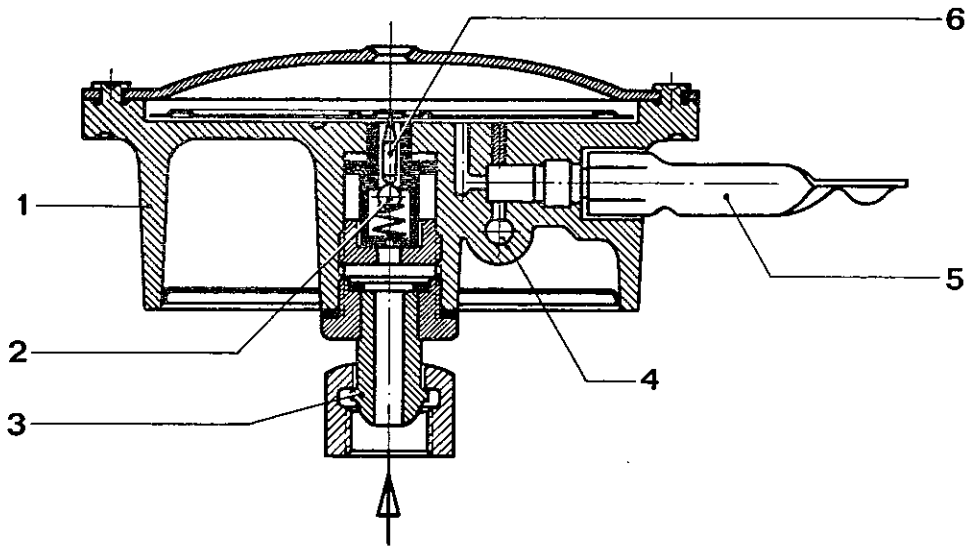

1 - regulating unit
2 - metering valve
3 - union with screw
4 - combustion air passage
5 - fuel jet with key
6 - valve rod

The regulating unit (1) is a diaphragm regulated carburetor device and provides the correct fuel / air mixture. The fuel jet (5) has a key head and should be hand tightened. The mixture pump draws combustion air from the regulating unit. The resultant depression deflects the diaphragm downward, thus depressing the valve rod (6) and opening the metering valve (2). Fuel supplied by the fuel pump then passes through the open metering valve and via a jet into the regulating unit where it is mixed with air. The mixture pump then supplies this combustible mixture to the burner through a hose.

Checking the Regulating Unit

Remove the fuel jet and clean with compressed air. Remove fuel pump union fitting, check seal and clean screen. Remove threaded ring insert (2) and make sure the unit is held with its metering valve up, otherwise the valve rod (6) and metering valve may be mislaid. Then remove the metering valve by holding the unit with its orifice facing down. Check metering valve and seal. Replace a leaking valve.

MIXTURE PUMP

The motor-driven mixture pump draws a fuel / air mixture from the regulating unit and delivers it under pressure to the burner.

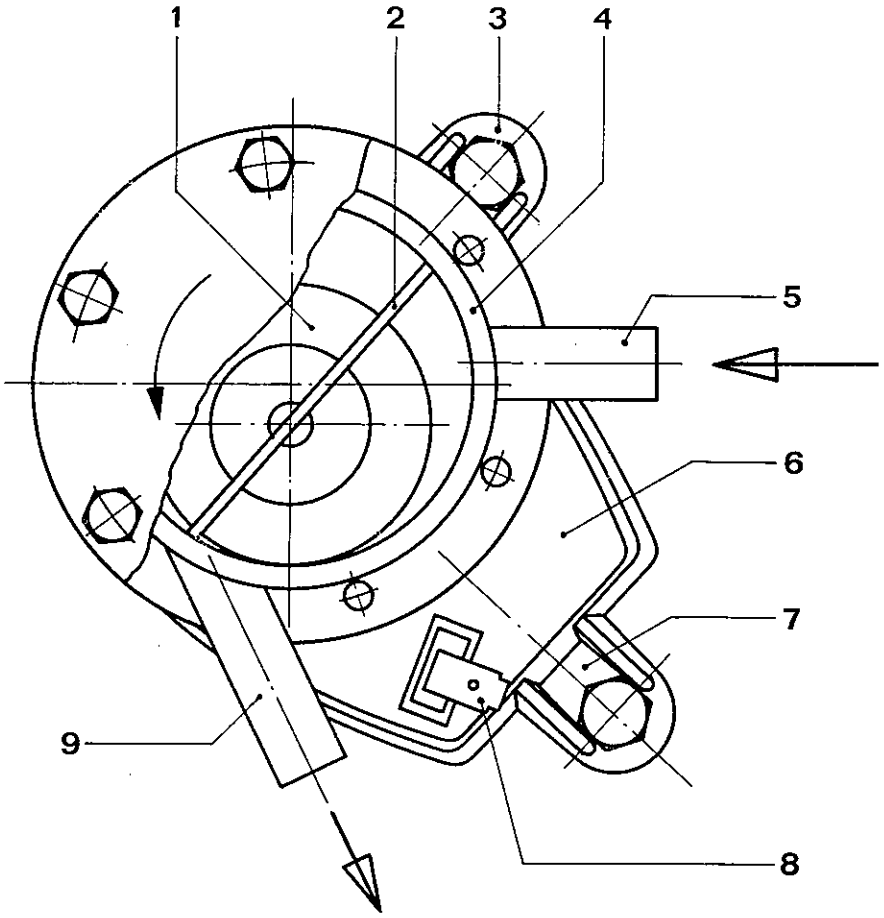

1 = rotor
2 = rotor vane
3 = ground bolt
4 = housing
5 = fuel / air mixture inlet
6 = motor
7 = operating voltage
8 = positive terminal connector
9 = fuel / air mixture outlet

Checking the Mixture Pump:

Remove protective cover from the motor, armature must easily be rotated by hand. Check carbon brushes and commutator for wear and replace carbon brushes, if necessary. If the armature of the motor cannot be turned, check the motor (6) for mechanical defects. If the mixture pump sticks, remove the 6 hexagon screws and take off pump cover. Then lift out rotor (1) and vane (2). Clean housing (4), cover, rotor and vane thoroughly. Install the rotor in the housing. If radial clearance between rotor and housing is below 0.0031 in. (0.08 mm), replace the mixture pump as an assembly. A worn or defective mixture pump should also be replaced as a complete assembly, as rotor, vane and housing are a mated assembly. End play between rotor and cover must be between 0.0031 and 0.0039 in. (0.08 and 0.1 mm). To check this play, use a feeler gauge in conjunction with a straight edge on the housing. If it is not within specification, it may be corrected by carefully lapping the rotor on fine emery paper. If it exceeds 0.0039 in. (0.1 mm), replace the mixture pump, since heat output will be reduced due to excessive clearance. Reposition the mixture pump cover without using a sealing compound. The hexagon screws should be diagonally and evenly tightened. Then seal the gap between cover and housing with a fuel and oil resistant

compound (Fluid, Curil, etc.). It is not advisable to operate the mixture pump for a prolonged period of time when it is not connected to the system.

Note

Use a 6 ampere quick-action fuse conforming to DIN 41571 with the mixture pump, otherwise the windings of the motor may burn out when overloaded.

SERVICE DIAGNOSIS FOR THE WEBASTO HEATING AND VENTILATING UNIT P 1018

1. Heater fails to start (or starts slowly), pilot lamp lights up, mixture pump operates. (Listen for the "clicking" sound typical of an operating mixture pump).

Possible Cause:	Remedy:
Fuel supply cut off due to: a) Clogged fuel jet	For a quick check whether or not the fuel jet is clogged, loosen the jet momentarily. If the heater starts, remove and clean the jet.
b) Fuel pump inoperative, or irregular fuel pump operation (one piston stroke per 3 to 5 seconds is correct).	Check the fuel pump terminals. Correct contact gap is 0.039 in. (1 mm).
c) Clogged banjo union at the burner.	Clean banjo pin.
d) Metering valve fails to open.	Remove and check metering valve. Replace if necessary.
e) Defective regulating unit	Replace unit as an assembly.

2. Pilot lamp lights up, heater does not start.

Possible Cause:	Remedy:
a) Faulty glow plug	Replace with BERU 129 G 4-volt glow plug.
b) Low glow plug voltage (correct voltage is between 3.8 to 4.5 volts)	Check battery, wire connections and series resistor.
c) Defective time regulator	40 seconds after the heater was turned on, the time regulator must become energized. Ohterwise, replace regulator as an assembly.

d) Mixture pump fuse blown, mixture pump damaged	Check and repair pump. Replace if necessary. Replace fuse. Use 6 ampere quick-action fuse only.

3. Heater operates in on position II, thermostat shuts off heater, heater does not restart, blower supplies cold air.

Possible Cause:	Remedy:
Thermostat fails to restart heater.	Check thermostat. Replace if necessary.

4. Heater operation correct, restricted air supply, blower runs.

Possible Cause:	Remedy:
Air intake covered up.	Above all check air intake at the tunnel in front of rear seats.

5. Blower runs in on position I, it does not operate in heater on position II or III, pilot lamp lights up.

Possible Cause:	Remedy:
a) No diode fitted	Install diode
b) Defective diode	Replace diode

Wiring Diagram for Webasto-Heater P 1018

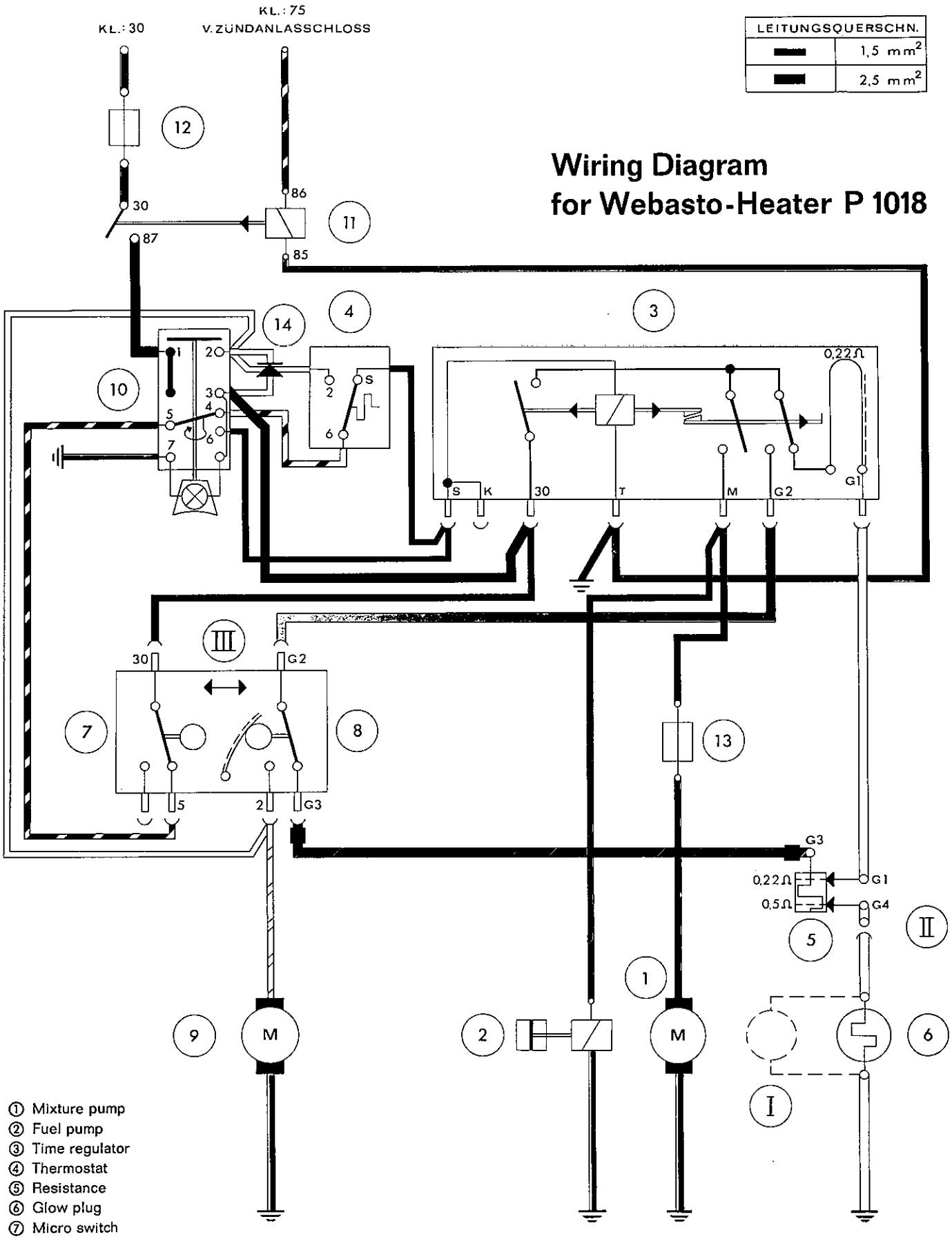

① Mixture pump
② Fuel pump
③ Time regulator
④ Thermostat
⑤ Resistance
⑥ Glow plug
⑦ Micro switch (overheat protection)
⑧ Micro switch (glow plug control switch)
⑨ Blower motor
⑩ Control switch
⑪ Main contact relay
⑫ Fuse 3 25 A
⑬ Fuse 6 A quick
⑭ Blocking diode

I Check the glow plug voltage when mounting the heater resp. before the first operation of the heater. The voltage must be between 3,8 and 4,5 volts. This measurement can best be done at charged battery or at approx. 3000 R.P.M.

II Two different values of resistance! Mind proper cable colours when connecting (G 1 yellow, G 3 black-red). The ohm values are shown on the resistances.

III Wiring diagram stated on the inside of the cover.

A rear window wiper installation kit is available as Part Nr.
901.628.910.00.

If the installation is to be made into a vehicle model of up to 1966 --

up to Chassis Nr. 305 100 - Type 911
354 000 - Type 912
458 100 - Type 912

it will be necessary to also procure the discontinued bellcrank assembly, Part Nr. 901.628.319.01, since the wiper kit includes a bellcrank which fits only engine compartment lids of the new version.

Installation

1. Place car on shop stand or lift.

2. Disconnect battery ground strap.

3. Disconnect wire loom from terminals in engine compartment, remove engine compartment lid.

4. Remove wire loom, enlarge its passage hole to 1/2" (13 mm) diameter, insert new rubber grommet, and install new wire loom.

   Grey wire -- Positive (+) terminal for license plate light
   Brown wire -- Negative (-) terminal for license plate light

5. In vehicles up to Chassis Nr. 305.100 (Type 911, 354.000 (Type 912 Porsche Body), and 458.100 (Type 912, Karmann Body):
   Mark location of the hole for the bellcrank assembly; distance "a" (see Fig. 21) is 7.5" (190 mm).
   The bore must be centered on the flat part of the reinforcing panel. Drill a starting hole approx. .2" (5 mm) diameter. To provide more support for the bellcrank assembly, a spacer tube of .4" (10 mm) inside diameter must be locally manufactured according to specifications given in Fig. 22. The diameter of the hole in the reinforcing panel is determined by the outside diameter of the spacer tube. It is best to drill a hole approx. 0.5 mm smaller and then filing it to the required size so as to provide a tight fitting support for the spacer tube. Drill a starting hole through the body skin and file to .4" (10 mm) diameter. Make sure that the hole is drilled in the middle of the area between the edge of the lid and the air intake grill.
   In lids with brazed-in spacer tube (beginning with 1967 models) drill a .4" (10 mm) hole through the body skin.

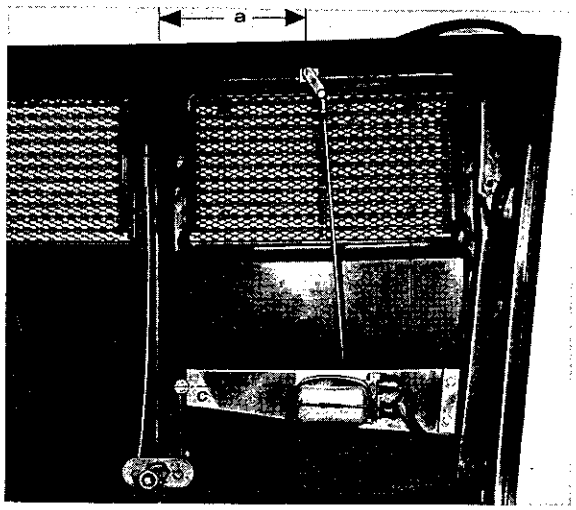

Fig. 21

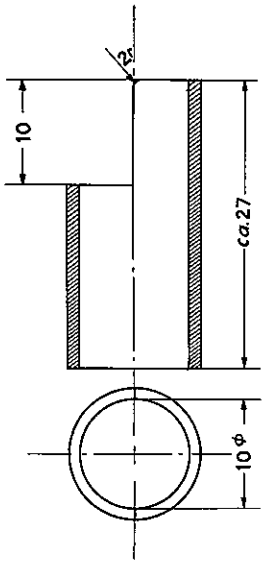

Fig. 22

6. Lids without brazed-in spacer tube:
Check length of spacer tube to ensure that it does not protrude beyond the surface of the reinforcing panel. Round off the edges of the bellcrank arm to ensure that it does not strike the weather strip (see Fig. 23).
In new version lids the above steps may be omitted since the bellcrank seat is located farther away from the edge of the lid.

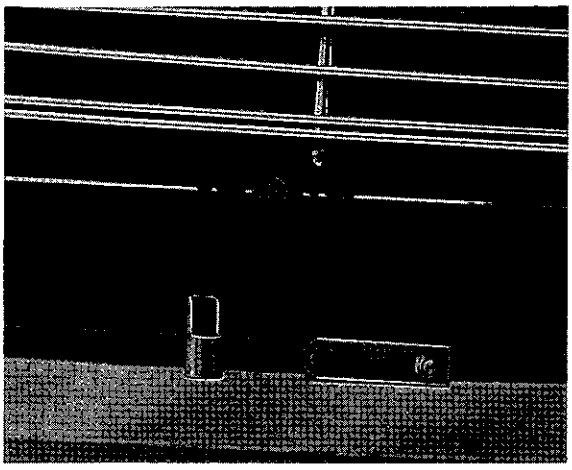

Fig. 23

7. Install bellcrank assembly.
In lids without the brazed-in spacer, install bellcrank assembly with spacer, place rubber piece under the aluminum washer lock, and thighten retaining nut (reposistion the washer lock vertically, as necessary). Install sealing cap.

8. Lids without brazed-in spacer tube:
Scribe a line on the wiper motor carrier plate to show the center of the single, threaded attaching hole in the carrier plate (see Fig. 21, Point c).

Insert and temporarily attach the carrier plate so that the distance "b" (see Fig. 21) is as follows when measured from the inside edge of the reinforcing panel to the edge of the carrier plate:

Distance "b" = 13.8" $\pm$ .02" (350 $\pm$ 0.5 mm) -- applicable to the discontinued version of the rear window wiper installation kit with a 404 mm long connecting link.

Distance "b" = 13.5" $\pm$ .02" (342 $\pm$ 0.5 mm) -- applicable to the new version of the wiper installation kit with a 356 mm long connecting link.

The length of the connecting link is measured between the ball socket centers.

Visually follow the line which shows the location of the threaded attaching hole in the carrier plate and appropriately mark its alignment on the reinforcing middle member of the lid. Drill a .256" (6.5 mm) hole along the above alignment line at a point .256" + .02" (6.5 + 0.5 mm) from the outer edge of the reinforcing member. Firmly secure the carrier plate after rechecking distance "b".

Lids with brazed-in spacer tube:
When using a new connecting link (356 mm length), distance "b" is 13.8" $\pm$ .02" (350 $\pm$ 0.5 mm). The bore center for the single attaching hole in the reinforcing middle member may be determined, or marked, as follows:

Using a compass, mark a line on the reinforcing middle member 16.4 $\pm$ .02" (417 $\pm$ 0.5 mm) away from the center of the bore which supports the bellcrank assembly, then mark a point on that line .256" + .02" (6.5 + 0.5 mm) from the outer edge of the reinforcing member; this will be the location of the carrier plate attaching hole.

9. Connect wires at engine:

Brown	Terminal 31
Red/black	Terminal 53
Red	Terminal 53a
Brown/white	Terminal 31b

10. Install connecting link.
The distance between the lid and the connecting link ball socket at the wiper motor crank must be at least .5" (12 mm); if necessary, bend the carrier plate slightly to obtain this dimension.

Note:

Should the ball socket be striking the retaining nut on the wiper motor shaft during operation, slightly bend the wiper motor lever away from the motor; if necessary, carefully grind some of the base metal off the ball socket.

11. Install electrical wire to connect the control switch with the wiper motor (see Figs. 24, 25, and 26). This procedure requires the removal of both seats, floormats, floorboards, and the tunnel rear cover.

Thread the connecting wire through with the aid of a welding rod inserted into the center tunnel through the forward end. The wire is then threaded through the rubber grommet of the battery cable and brought into the engine compartment alongside the main wire loom. Secure the wire with attaching clips and friction tape (see illustrations).

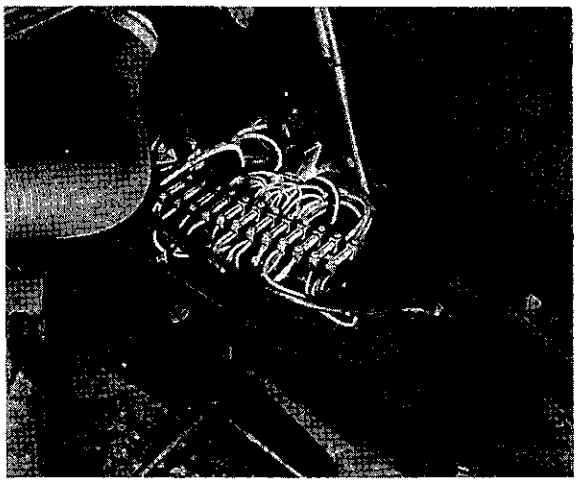

Fig. 24

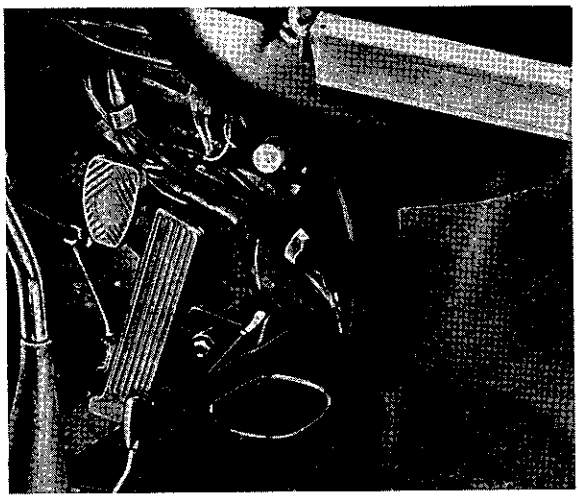

Fig. 25

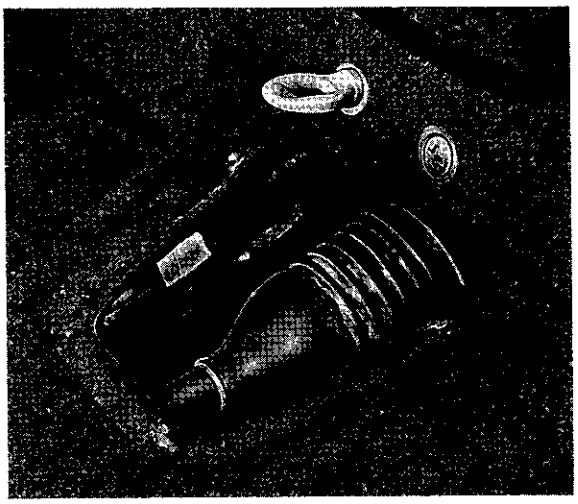

Fig. 26

12. Drill mounting hole for wiper switch (.335" or 8.5 mm dia). Mark location of the hole in the middle between the tachometer and the multigauge unit (Fig. 27); the distance between bore center and aluminum strip (or) rear edge of wood panel is 1.457" (37 mm).

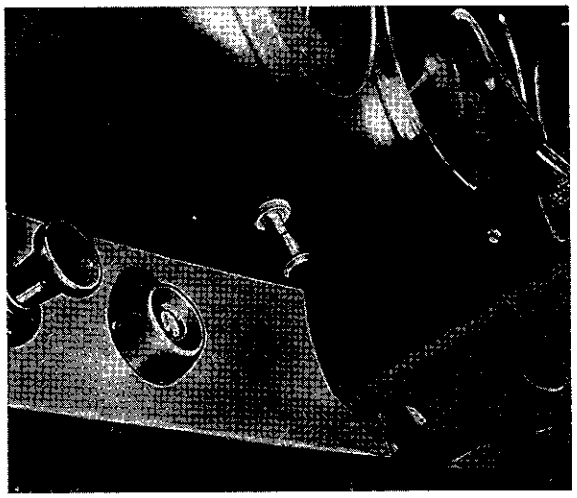

Fig. 27

13. Connect ground wire to ground terminal screw. Connect red wire (without snapon connector) of wire loom to Fuse 4 in the fuse box (see Fig. 24).

14. Connect wires to control switch:

Ground wire, brown	Terminal 31
Red/black	Terminal 53
Brown/white	Terminal 31b
Red	Terminal 53a

15. Install control switch.

16. Install engine compartment lid.

17. Connect electrical wires (see Fig. 28):

Brown	-	Body ground terminal screw
Grey	-	Engine compartment connecting point (license plate lights)
Red	-	Suspension fuse - voltage regulator B+ in Type 912; Terminal B+ in Type 911
Brown/white	-	brown/white Wire to control switch
Red/black	-	red/black Wire to control switch

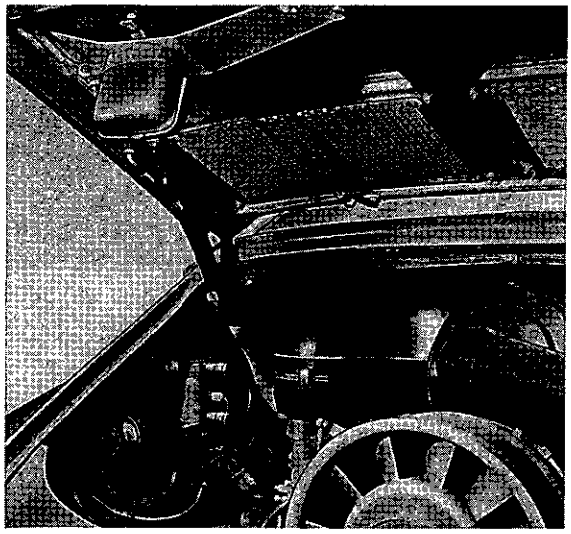

Fig. 28

18. Connect battery ground strap, install tunnel rear cover, floorboards, floormats, and seats.

19. Switch the wiper on and off (this will ensure that the wiper is in its end-of-travel position). When in the end-of-travel position, the wiper blade should be located parallel to the side edge of the rear window. Check wiper movement on wetted rear window to ensure that the blade does not strike the window liner, readjust the wiper blade position if necessary.

Available as Part Nr. 901.545.921.00 is a electrically heated rear window kit which is complete with all necessary accessories.

Installation

1. Install switch (with control lamp) on instrument panel between the cigarette lighter and steering post support.

2. Connect the switch to terminal 75 of the ignition switch (see wiring diagram) and the free wire of the wire loom leading to the car's rear.

3. Remove rear window and install the heated version. (The wires lead between the engine sound-proofing mat and the body under the left lid hinge into the engine compartment).

4. Connect one terminal to ground, the other to the switch through the terminal block.

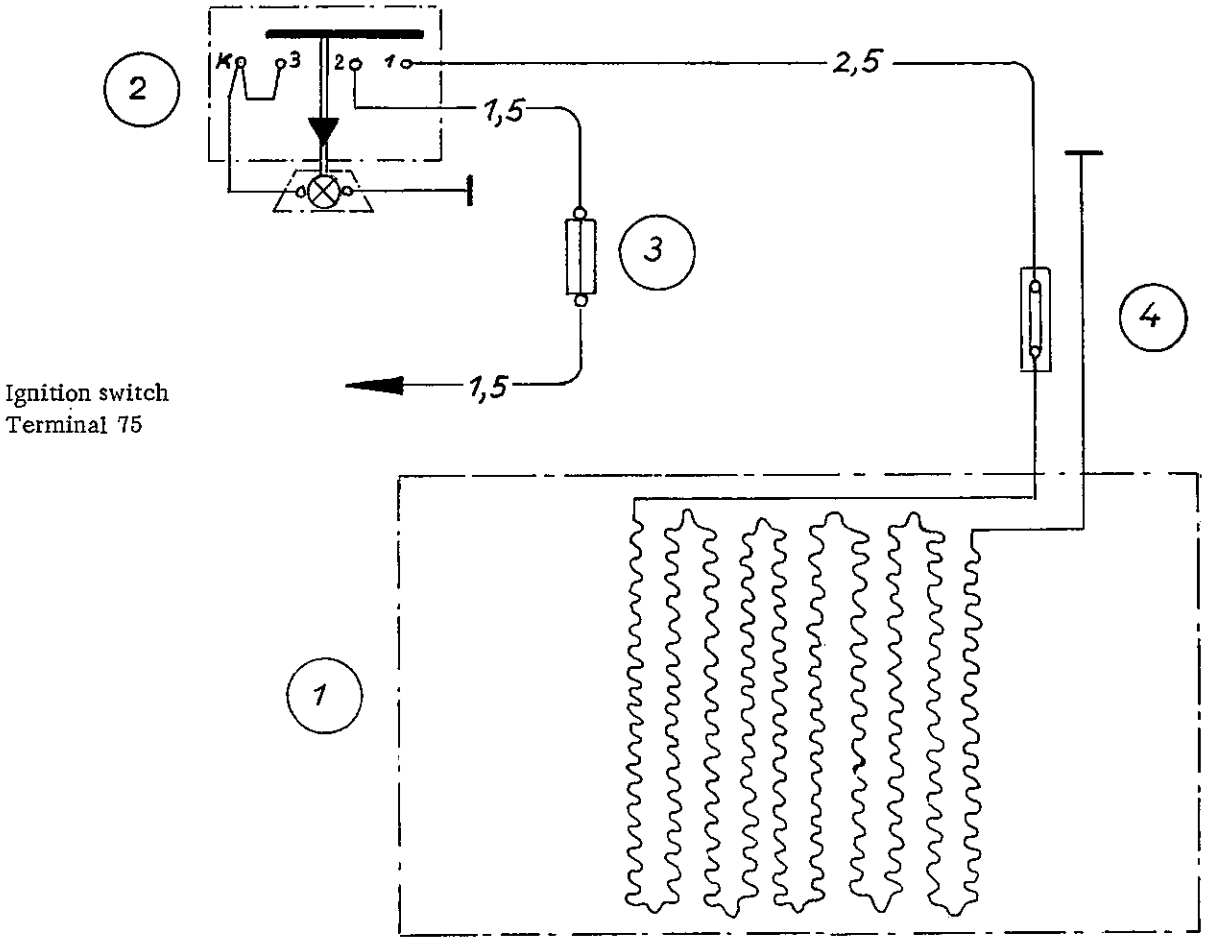

Fig. 29

1 HEATED REAR WINDOW

2 PUSH-PULL SWITCH

3 FUSE HOLDER

4 TERMINAL BLOCK

HAZARD WARNING LIGHT

General

The warning light system consists of the below listed main parts which are available in kit form, including all necessary accessoires, as Part Nr. 901.612.901.00:

1 Hazard light push-pull switch with control lamp
1 Hazard light relay switch
1 Hazard light flasher unit
1 Hazard light fuse

The switch is mounted on the instrument panel above the radio compartment cover. The relay switch and flasher unit are mounted under the left floorboard (below the pedals) next to the headlamp signal flasher relay. The fuse holder for the hazard light system is located under the luggage compartment mat, next to the main fuse box. The necessary wire connections are included in the wire loom of all cars regardless whether or not these leave the plant with the hazard light system installed.

Manner of Wiring:

The hazard warning light may be switched on by pulling the switch knob out, at which time a red control lamp goes on to indicate that the system is in operation. With the switch in the "On" position, the regular directional signal system is switched off through the hazard light relay switch.

A label attached to the hazard light switch serves as a reminder against a misuse of the system.

SUBSEQUENT INSTALLATION OF THE HAZARD WARNING LIGHT SYSTEM

1. Install switch in the center hole (prefabricated) above the radio compartment cover in the instrument panel.

2. Install hazard light relay switch and flasher unit under the floorboard next to the headlamp signal flasher relay.

3. Connect wires with fuse by following the wiring diagram.

See next page for wiring diagram.

Wire color code:

- ● Black
- ○ Red
- ◐ Green/white
- ◓ Black/white
- ◒ Black/green
- ◑ White/red

WIRING DIAGRAM

FOR

HAZARD WARNING LIGHT SYSTEM

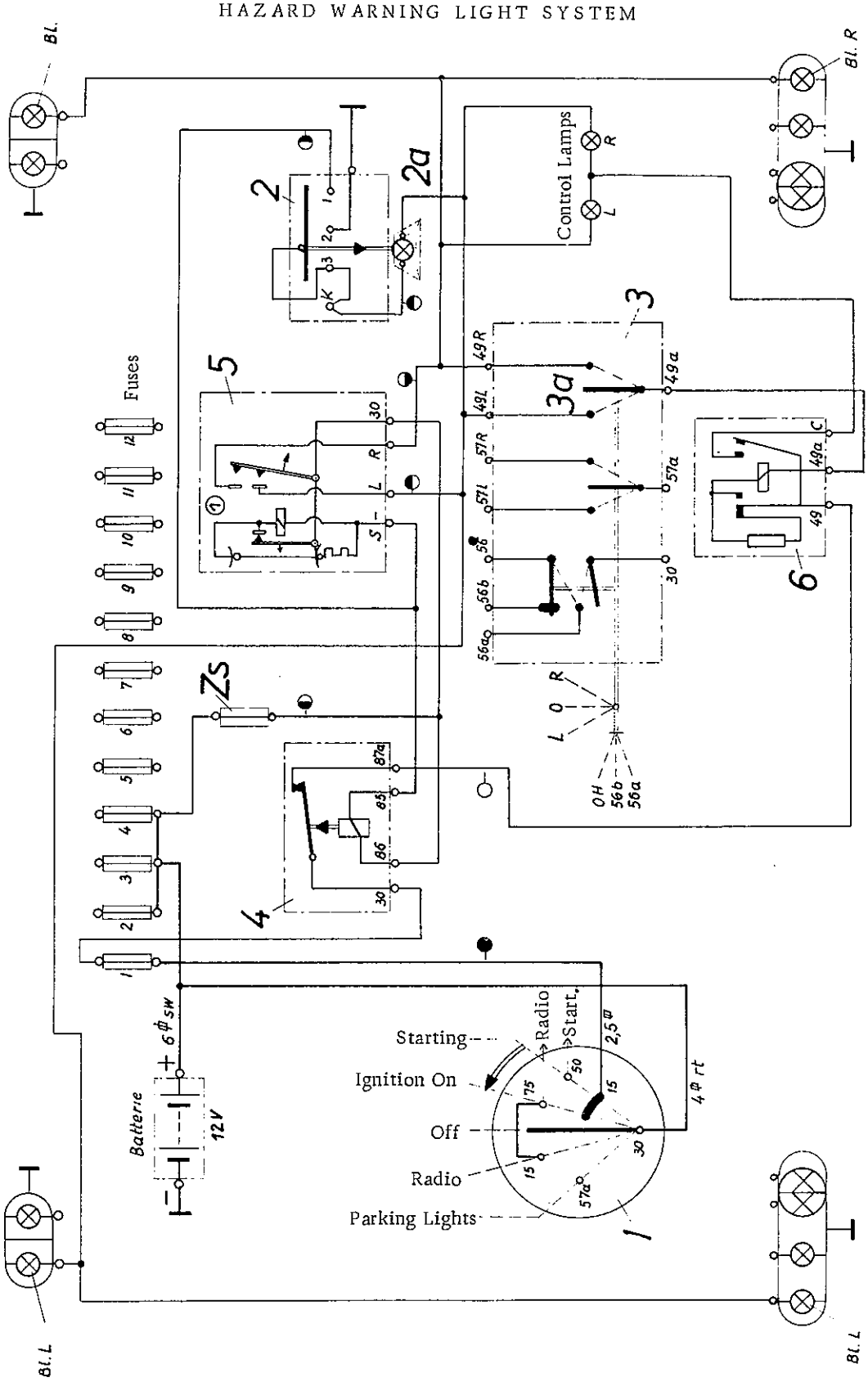

Fig. 30

The recirculating air blower is available in kit form as Part Nr. 902.571.910.00 for subsequent installation in the car; the kit contains all necessary accessories.

Installation

1. Disconnect battery.
2. Remove luggage compartment mat.
3. Open the blower compartment top and remove steering shaft shield.
4. Remove blind covers from the left heater nozzle, connecting air ducts, and connecting wire.
5. Remove carpeting from right front side panel.
6. Remove hot air duct and sealing plate from the forward fire wall.
7. Install duct Y-section and attach hot air duct to it.
8. Fasten connecting air duct to the forward fire wall.
9. Remove solid cover from center tunnel behind the front seats and replace with a cover grill, Part Nr. 901.504.075.31.
10. Relocate wire loom as shown in Fig. 32.
11. Mount relay switch in the studs already provided for that purpose.
12. Install switch in the prefabricated hole in the instrument panel.
13. Install air blower as shown in Fig. 32. Ensure good seating of the sealing ring and screen of the air intake stack.
14. Push a flex-hose section (approx. 31" or 80 cm long) down through the hole on the sheetmetal panel, secure with hose clamps at the left nozzle Y-section and the blower.
15. Push a flex-hose section (approx. 29.5" or 75 cm long) from the interior through the cross-over flange in the fire wall, secure with hose clamps at the Y-section and blower.
16. Connect wiring according to diagram.
17. Reglue carpeting to the right front side panel.
18. Install steering shaft shield, spread luggage compartment mat, reconnect battery.

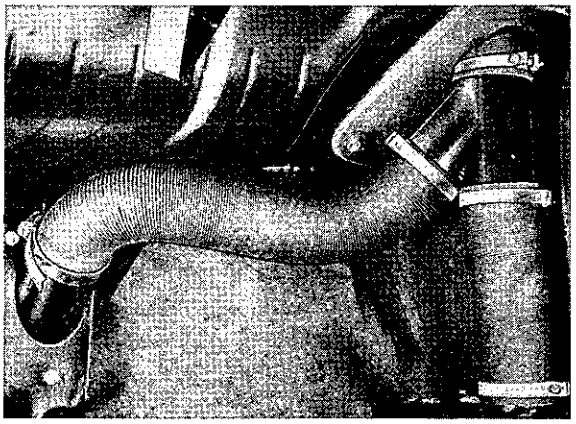

Fig. 31

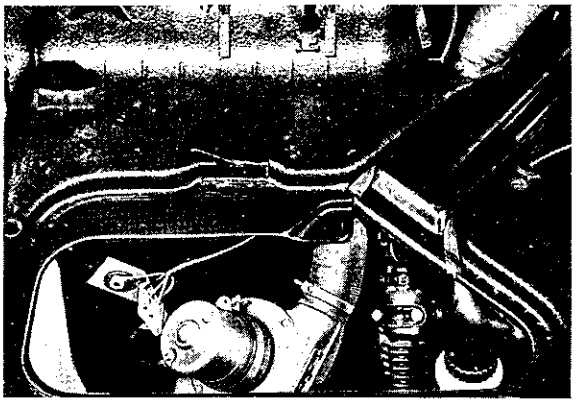

Fig. 32

WIRING DIAGRAM

FOR

VENTILATING AIR BLOWER

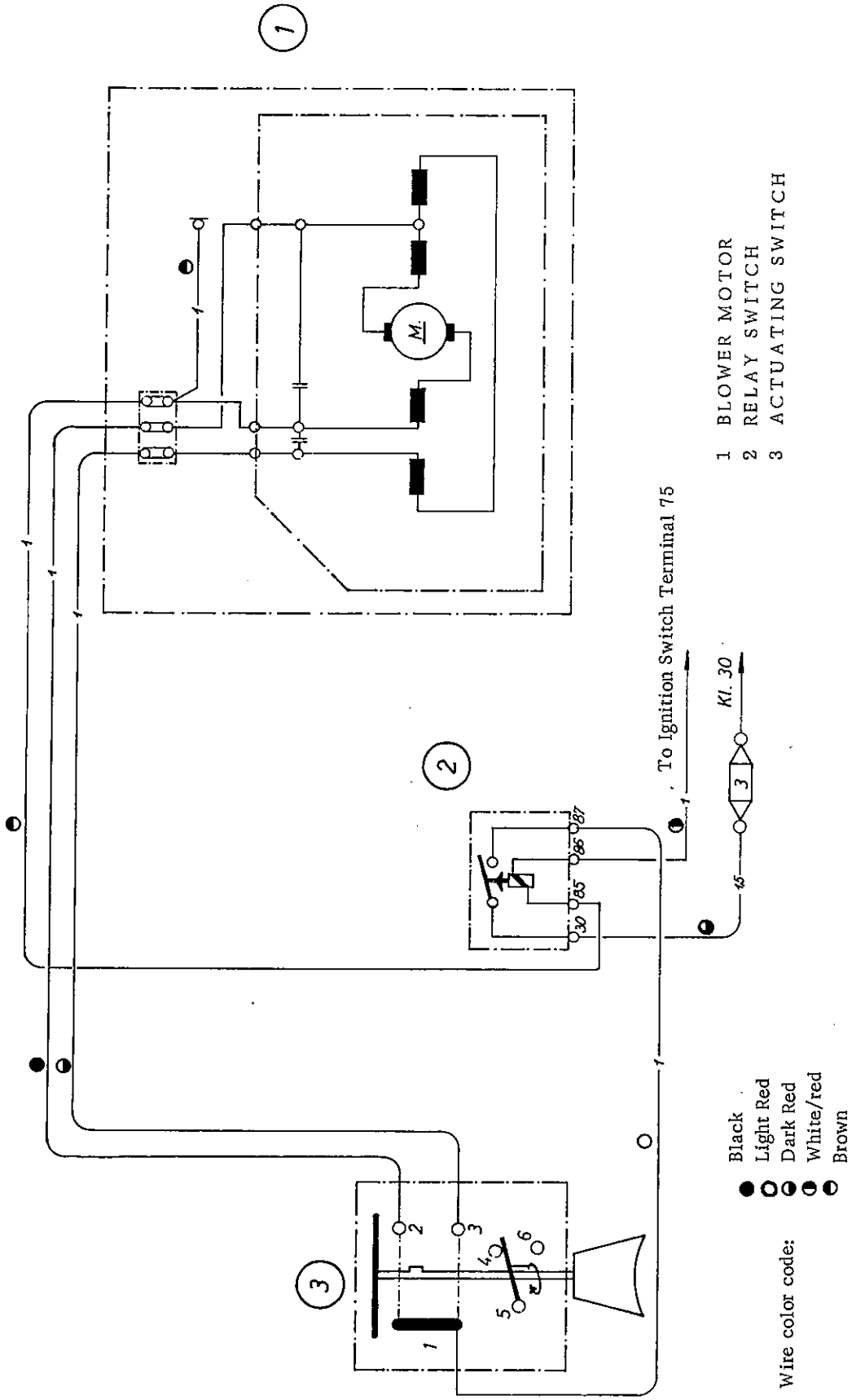

Fig. 33

Manufacturers of electric antennas normally furnish installation instructions with the kit. For this reason, we are describing the installation of the "HIRSCHMANN Automatic Antenna" which may also be installed on the production line when ordered with the car.

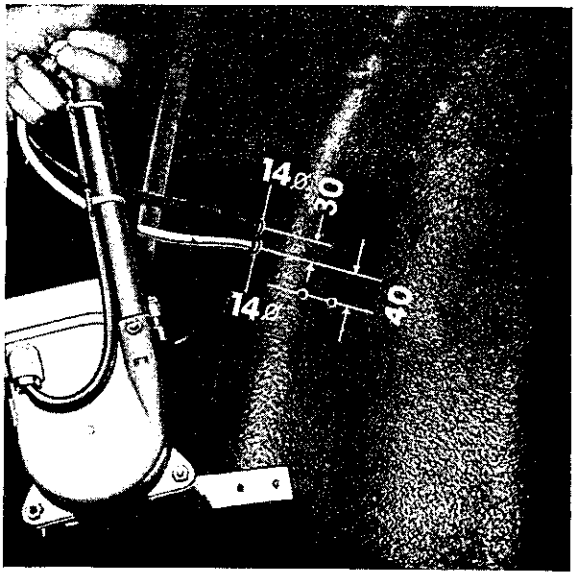

(1 mm = .03937")

Fig. 35

Installation

1. Detach paneling from the right front panel and remove floorboard.

2. Drill antenna hole in the right side of the car.

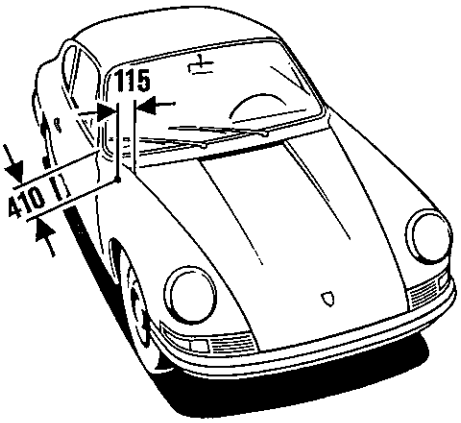

Fig. 34

3. Insert antenna in mounting hole, position properly, and fasten. Mark and drill holes for antenna motor mounting bracket and antenna lead.

4. Tighten antenna, connect ground wire to ground, connect antenna lead, control wire, and the positive terminal (see Figs. 36, 37, and 39).

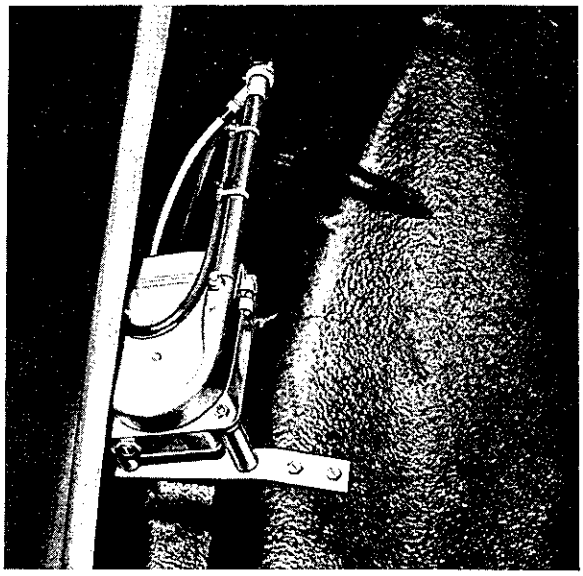

Fig. 36

Fig. 37

5. Install auxiliary fuse with connecting lead and connect between terminal bar and fuse box.

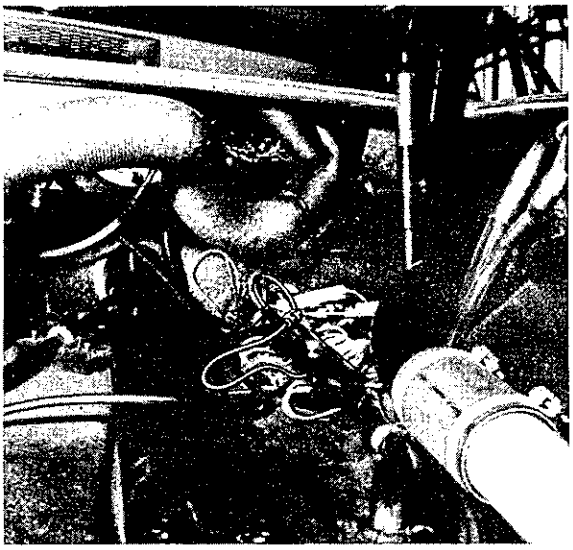

Fig. 38

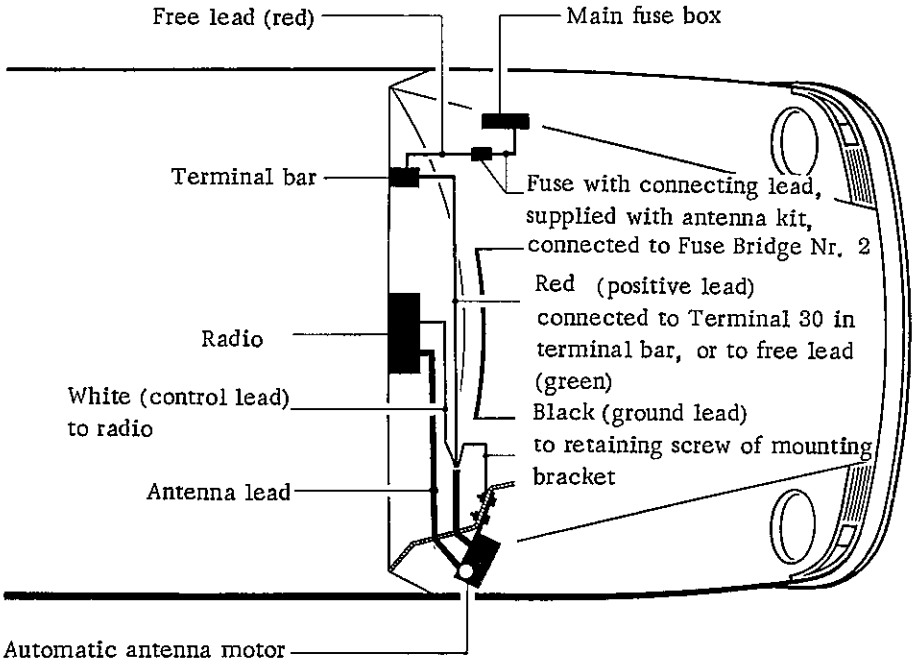

Fig. 39

SUPPLEMENTS

GROUP **TRA**

TECHNICAL REMARKS
ACCESSORIES

CONTENTS

Supplements for Group TRA: Technical Instructions, Accessories

CONVERTING THE HEATING AND VENTILATING UNIT WEBASTO P 1018.00, PART NUMBER 901.572.051.30, TO TRANSISTORIZED IGNITION

The heating and ventilating units which were standard equipment or optional extras, respectively, up to the below cited chassis serial numbers, can be subsequently converted to transistorized ignition:
Chassis Serial Nr. 308 069, 355 414, 462 711, 500 419, and 550 271.
The conversion kit is carried under part number 901.617.010.30.

General:

It is possible with relatively little effort to change the glow plug ignition system of the heater into a transistorized ignition system. The conversion has the following advantages:

1. The heater will be insensitive to voltage drop (such as in a defective battery).

2. The high-tension ignition performance is continuous, thus, the heater will be less sensitive to variations in the fuel supply.

3. The system saves electricity since no glow-plug ignition is in continuous application.

4. The heater can be switched on or off on demand.

5. The heater has a purging ventilating cycle (colling the heater subsequently to the heating cycle).

For better understanding of the procedure during the conversion, we recommend the use of the formerly applicable wiring diagram (color coded) and proceeding as follows:

Remove car radio if one is installed in the car.

1. Remove carpeting from the luggage compartment.

2. Detach ground strap from battery.

3. Remove water drain box from fresh air inlet.

4. Detach wiring from the timer and remove timer.

5. Saw off the protruding ends of the retaining bolts in timer.

6. To prevent the windshield wiper linkage from striking the wiring of the spark generator, mount spark generator 20 mm farther away. This necessitates drilling two .217" (5.5 mm) holes. The hole needed on the right side (in direction of travel) should be drilled directly below the former stud. The second hole should be drilled at a distance of 5" (127 mm) horizontally away from the first hole.

7. Prior to mounting the spark generator, connect the white plug to the spark generator and lead the wires into the plug as follows:

into 1	2 x brown wire
into 2	2 x black wire
into 4	1 x yellow wire
into 5	2 x black/red wire
into 6	2 x purple wire

SPARK GENERATOR

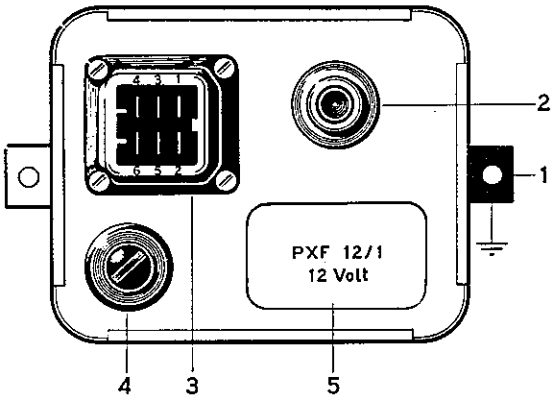

Fig. 1

1 Housing with mounting bracket
2 High tension plug
3 Connecting plug
4 Fuse
5 6V or 12V current rating

Connect high tension lead and mount spark generator. Make sure that the spark generator housing has good ground connection.

8. To properly install the high tension lead, it is necessary to drill a .197" (5 mm) hole between both fuel hoses located in the luggage compartment floor, and then enlarging the hole to .315" (8 mm) with the aid of a starting punch. After that, lead the high tension wire behind the metering pump, along the fuel hoses, up to the glow plug.

9. Remove glow plug (6); this part is eliminated through the use of a glow/spark plug. Connect plug connector making sure that the compartment top does not touch the spark plug connector. Should this be the case, peen the compartment top upward to provide the necessary clearance.

10. Connect the green wire of Terminal G2 in the timer to Terminal 30 in the relay switch (11).

11. The resistor is eliminated; for reasons of difficulty in removal, it may be left in place. The black/red and yellow connecting wires should be detached from their connectors. The white silicon wire should be cut off.

    a. The detached black/red wire should be lengthened with the wire and connector included in the conversion kit. Using a lead wire, pull this cable through the conduit which accomodates the wire loom, on to the spark generator. Install a tab connector on the wire end and connect to Terminal 3 of the six-fold connector plug.

    b. The removed yellow wire should be cut off at the point of exit from the tube. It is to be lengthened with a white, temperature-proof, silicon wire contained in the conversion kit and then connected to the positive (+) terminal of the glow plug. Note: Do not confuse with the negative (-) terminal of the plug. Connect ground wire to the glow plug.

12. Reinstall water drain box.

13. Reconnect battery.

14. Reinstall carpeting in luggage compartment.

Check the following when testing the heater:

1. Check glow-voltage at the plug (when switching the cold unit on, it should be 12 Volts - 10 %).

2. Checking high tension after 10 minutes of heater operation: After briefly switching the heater off, it should re-ignite immediately when switched on again.

3. Check ventilator purging cycle. The cycle lasts for about 3 minutes. Should the heater not cool sufficiently during this cycle as a result of high outside air temperatures, the cycle will repeat automatically.

The spark generator consists of a transistorized high-tension power supply which provides a voltage of approx. 6000-8000 volts. The integral twin-relay switch, which is actuated by the manual heater control, energizes the glow plug, mixture pump, and the power supply unit. Maximum current rating for the relay switch is 10 amps. The permissible environmental temperature is from -40°C to +60°C (-40°F to +140°F).

Checking Spark Generator

1. Checking twin-relay switch in spark generator:

   a. Remove spark generator.

   b. Energize Terminal 4 of the spark generator by connecting it to Terminal 30 in fuse box or directly to the battery positive terminal. Connect a test lamp between Terminal 3 of the spark generator and the ground. The lamp should not light up in this hookup.

   c. Make the same test at Terminal 5 and 6 of the spark generator by energizing Terminal 5 of the spark generator and connecting the test lamp between Terminal 6 and the ground. The lamp should not light up in this hookup.

   d. When the spark generator is switched on, that is, Terminal 2 is connected to a positive (+) terminal, and Terminal 1 to the ground (-), current should flow through Terminals 3 and 4, and 5 and 6.

2. Checking Power Supply Unit:

   a. Check fuse, replace if defective.

   b. Connect high-tension wire to the spark generator, attach spark plug connector to the glow plug, and place glow plug onto a ground-connected (-) surface. With the spark generator switched on, i.e., by energizing Terminal 2 (+) and grounding Terminal 1 (-) of the spark generator, the glow plug should have a continuous high-tension spark.

If the test reveals that the relay switch or power supply of the spark generator is not functioning properly, it will be necessary to replace the spark generator.

Wiring Diagram for Webasto-Heater P 1018

(FOR CONVERSION TO TRANSISTORIZED IGNITION)

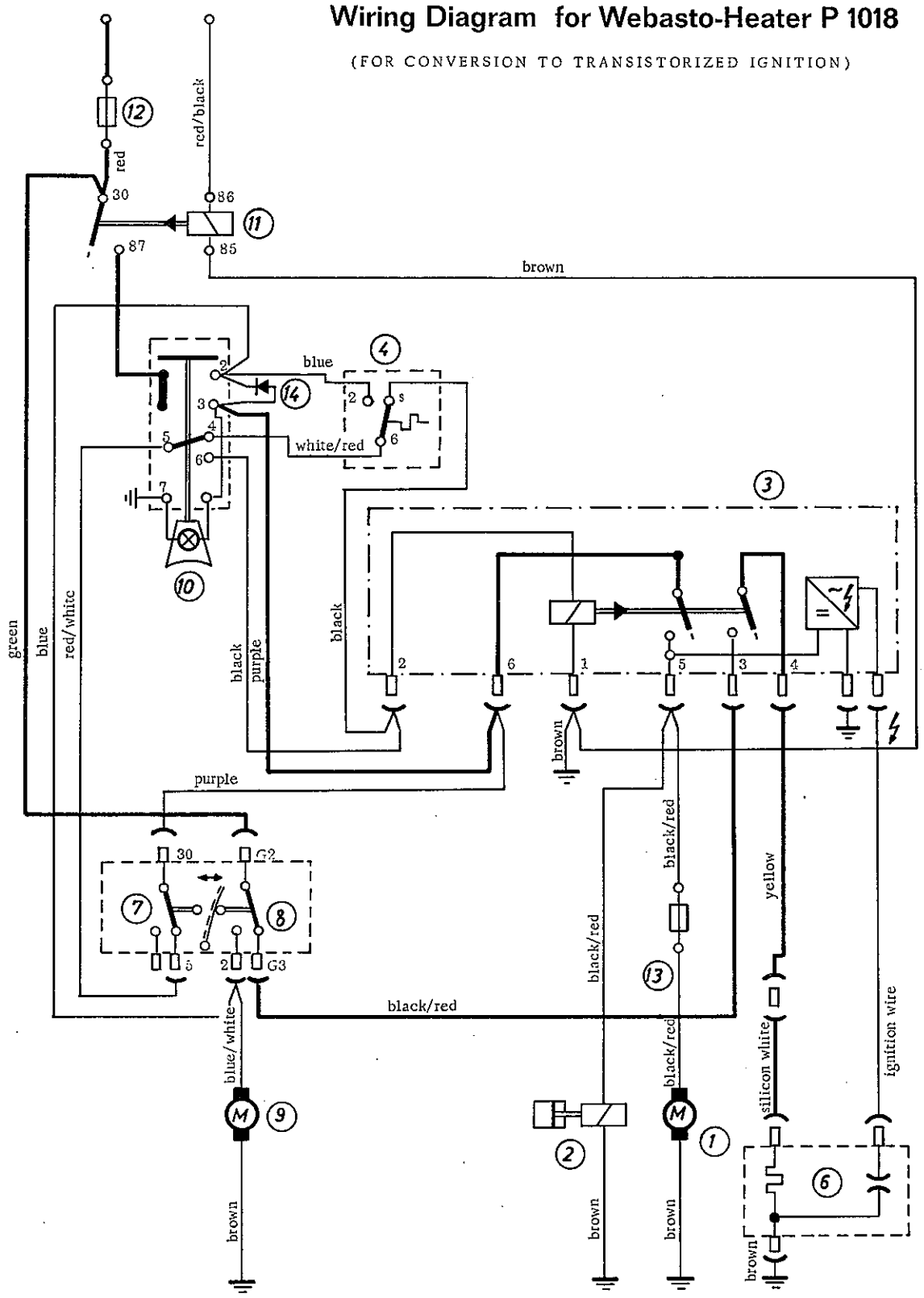

1 Mixture pump
2 Metering unit with fuel pump
3 Spark generator
4 Thermostat
6 Glow plug
7 Overheat switch
8 Microswitch
9 Blower motor
10 Actuating switch
11 Relay switch
12 Fuse
13 Fuse

REPAIR INSTRUCTIONS FOR THE WEBASTO HEATING AND VENTILATING UNIT TYPE P-1018.02 (TRANSISTORIZED)

General

These repair instructions are confined to those parts of the Webasto auxiliary heater which have been changed as a result of the conversion of the P-1018 unit to transistorized ignition. Instructions pertaining to parts which have not been changed are contained in Group TRA, page TRA 1 thru TRA 17.
The following modified parts are being utilized as a result of conversion of the P-1018 unit to transistorized ignition (P-1018.02).

Heat Exchanger

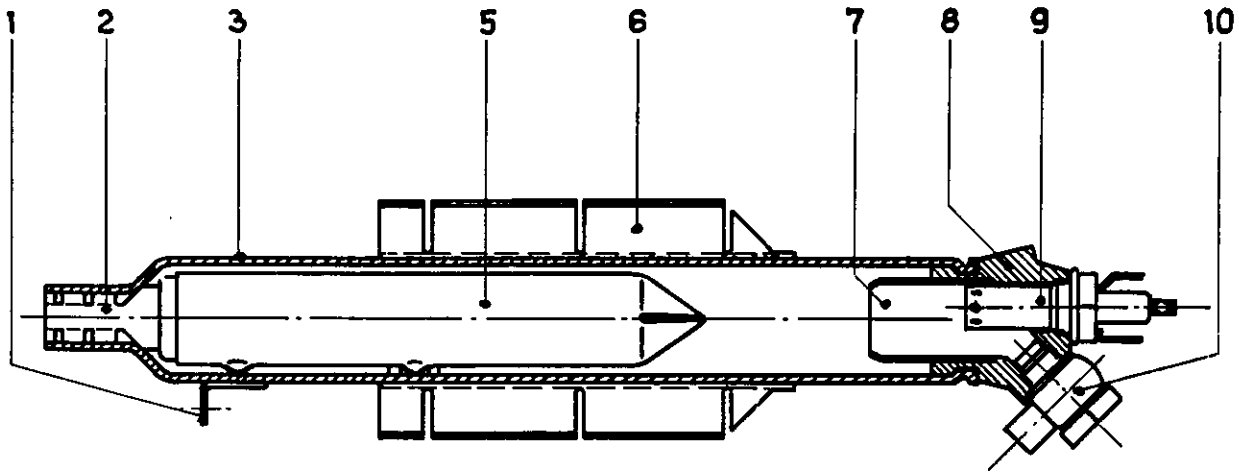

Fig. 1

1 Bracket
2 Exhaust pipe
3 Steel tube
4 (discontinued)
5 Distributor cone
6 Heat exchanger fins
7 Combustion chamber
8 Burner
9 Glow plug
10 Banjo union

MIXTURE PUMP

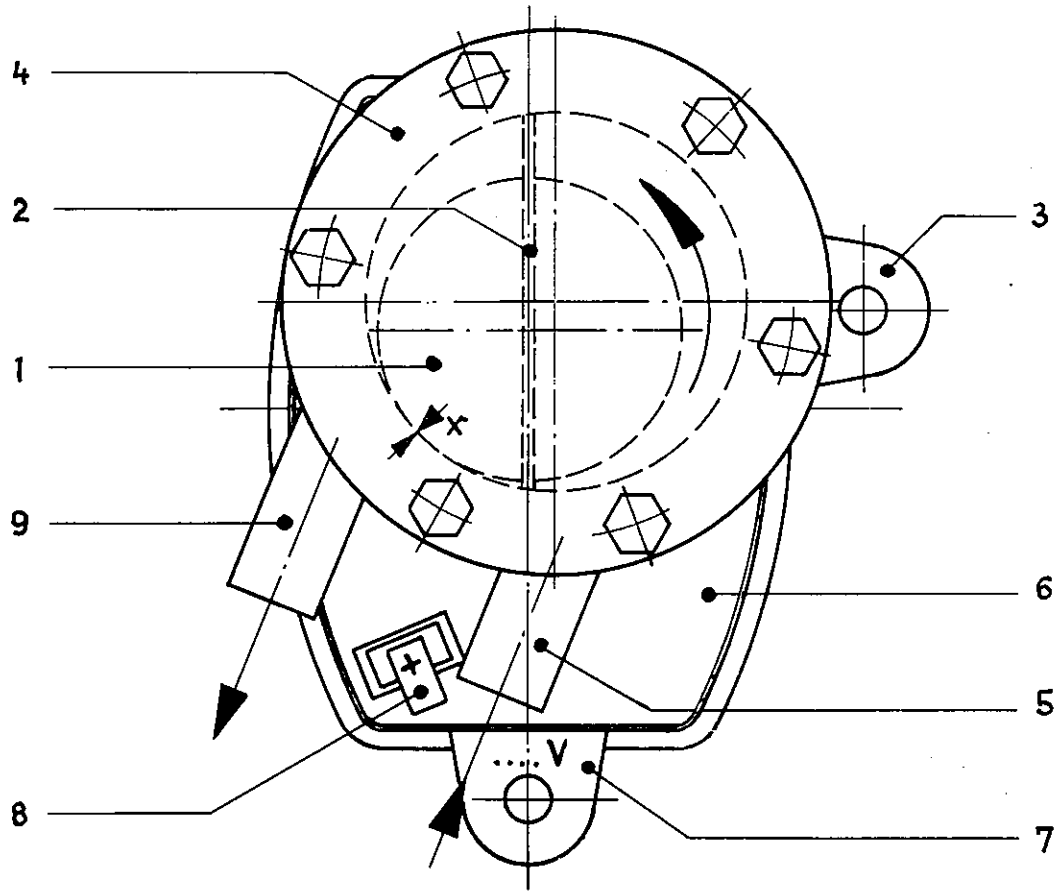

Fig. 2

1 Rotor
2 Rotor vane
3 Ground terminal
4 Housing
5 Fuel/air mixture inlet
6 Motor
7 Voltage rating
8 Positive terminal
9 Fuel/air mixture outlet

SPARK GENERATOR

Due to the conversion of the Webasto auxiliary heater to transistorized ignition, the timer has been replaced with the spark generator.

Description

The spark generator consists of a transistorized high-tension power supply which provides a voltage of approx. 6000-8000 volts. The integral twin-relay switch, which is actuated by the manual heater control, energizes the glow plug, mixture pump, and the power supply unit. Maximum current rating for the relay switch is 10 amps. The permissible environmental temperature is from -40°C to +60°C (-40°F to +140°F).

Checking Twin-Relay Switch in Spark Generator Unit:

1. Remove spark generator.

2. Energize Terminal 4 of the spark generator by connecting it to Terminal 30 in fuse box or directly to the battery positive terminal. Connect a test lamp between Terminal 3 of the spark generator and the ground. The lamp should not light up in this hookup.

3. Make the same test at Terminal 5 and 6 of the spark generator by energizing Terminal 5 of the spark generator and connecting the test lamp between Terminal 6 and the ground. The lamp should not light up in this hookup.

4. When the spark generator is switched on, that is, Terminal 2 is connected to a positive (+) terminal, and Terminal 1 to the ground (-), current should flow through Terminals 3 and 4, and 5 and 6.

Checking Power Supply Unit:

1. Check fuse.

2. Connect high-tension wire to the spark generator, attach spark plug connector to the glow plug, and place glow plug onto a ground (-) connected surface. With the spark generator switched on, i.e., by energizing Terminal 2 (+) and grounding Terminal 1 (-) of the spark generator, the glow plug should have a continuous high-tension spark.

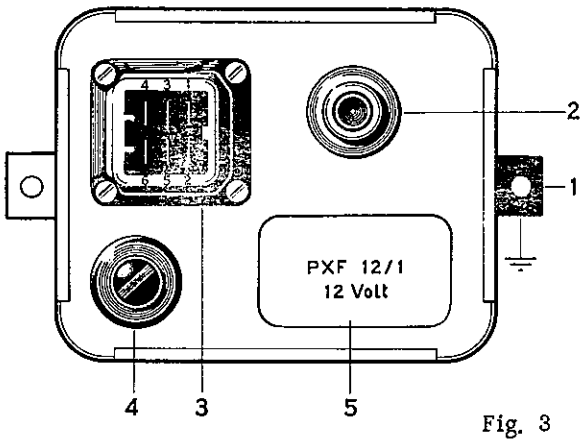

Fig. 3

1 Housing with mounting brackets
2 High tension plug
3 Connecting plug
4 Fuse
5 Voltage rating (6V or 12V)

If the test reveals that the relay switch or power supply of the spark generator is not functioning properly, or will be necessary to replace the spark generator.

GLOW PLUG

The glow plug has, in addition to the glow element, two high tension electrodes which produce a constant flow of sparks as long as the heater is switched on. When the heat exchanger has reached a predetermined temperature, the glow plug is switched off; however, the high-tension ignition system remains unaffected by the system controlling the glow plug.

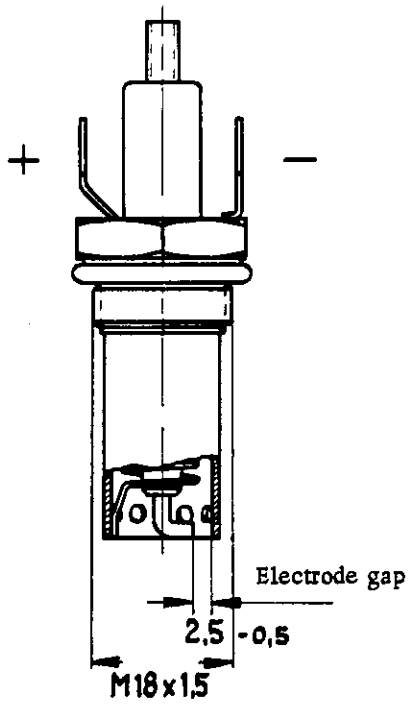

Fig. 4

Checking Glow Plug

1. Unscrew the glow plug and carefully remove any carbon deposits that may have accumulated.

2. Check electrode gap (2.0-2.5 mm or .080" to .100"), adjust if necessary.

3. Connect glow plug to a 12 volt source.
   Caution: Do not mix up positive and negative terminals. The glow plug must glow bright red within approx. 7 seconds.

Glow coil	12V ± 10 %, 5.6A
Ignition voltage	5000V
Suppressor	5kOhm ± 10 %

Heat Sentinel

The glow and overheat switch has been discontinued with the introduction of the Type P-1018.02 transistorized Webasto auxiliary heater, having been replaced by the heat sentinel.

Description

The heat sentinel consists of a housing which contains a temperature sensor and two electric circuits. The two circuits are switched in succession by means of a control cam, which is connected to the temperature sensor, when certain temperatures are reached. When the heating air temperature reaches approx. +65°C (+149°F), the contact G_2 - G_3 switch over to G_2 - B.
As a result the glow plug circuit is switched off, but the ventilating blower continues to receive current through Terminal B so that the blower stays on after the heater has been switched off. After about 3 minutes, the cooling cycle is stopped by switching the contacts G_2 - B to G_2 - G_3.
If the unit should overheat, the temperature sensor and the control cam will interrupt the circuit through contacts T - 31 at a temperature of approx. 135°C (275°F), which stops the flow of current to the mixture pump and ignition.
However, the blower will continue to run. When the temperature sensor has cooled down to about 100°C (212°F), the mixture pump and heater ignition circuit are automatically reenergized.

Checking Heat Sentinel in Cold Condition

1. Remove heat sentinel.

2. Energize Terminal G_2 by connecting it to Terminal 30 in the fuse box or directly to the positive (+) terminal of a 12V battery.

3. Connect test lamp between Terminal G_3 and ground. The lamp should light up.

4. Energize Terminal T.

5. Connect test lamp between Terminal 31 and ground. The lamp should light up.

The temperature sensor must not be turned with force. The control cam adjustment in the heat sentinel must not be changed. If the heat sentinel becomes defective, it must be replaced.

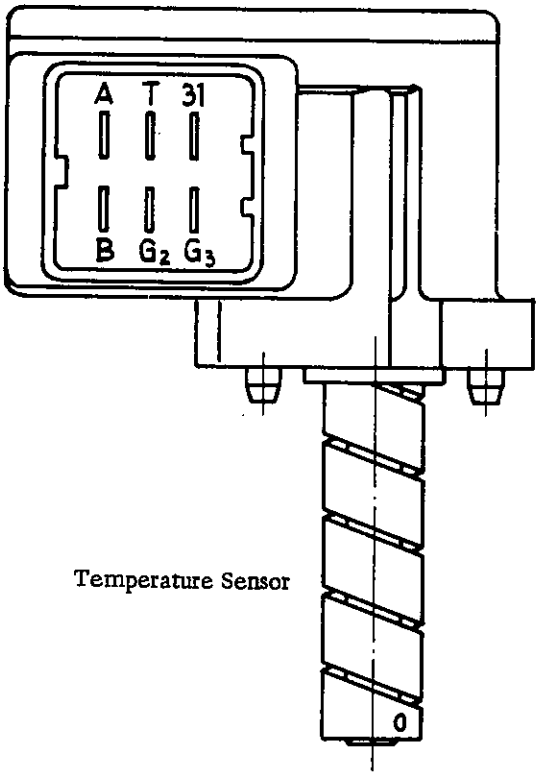

Fig. 5

Circuit Diagram

Switch position in cold temperature sensor

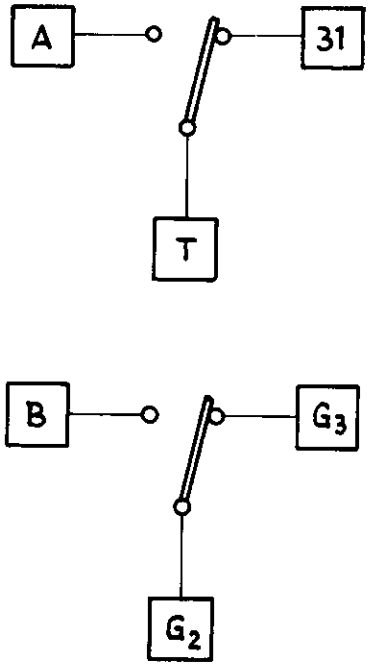

Fig. 6

WEBASTO HEATER P-1018.02 - WIRING DIAGRAM

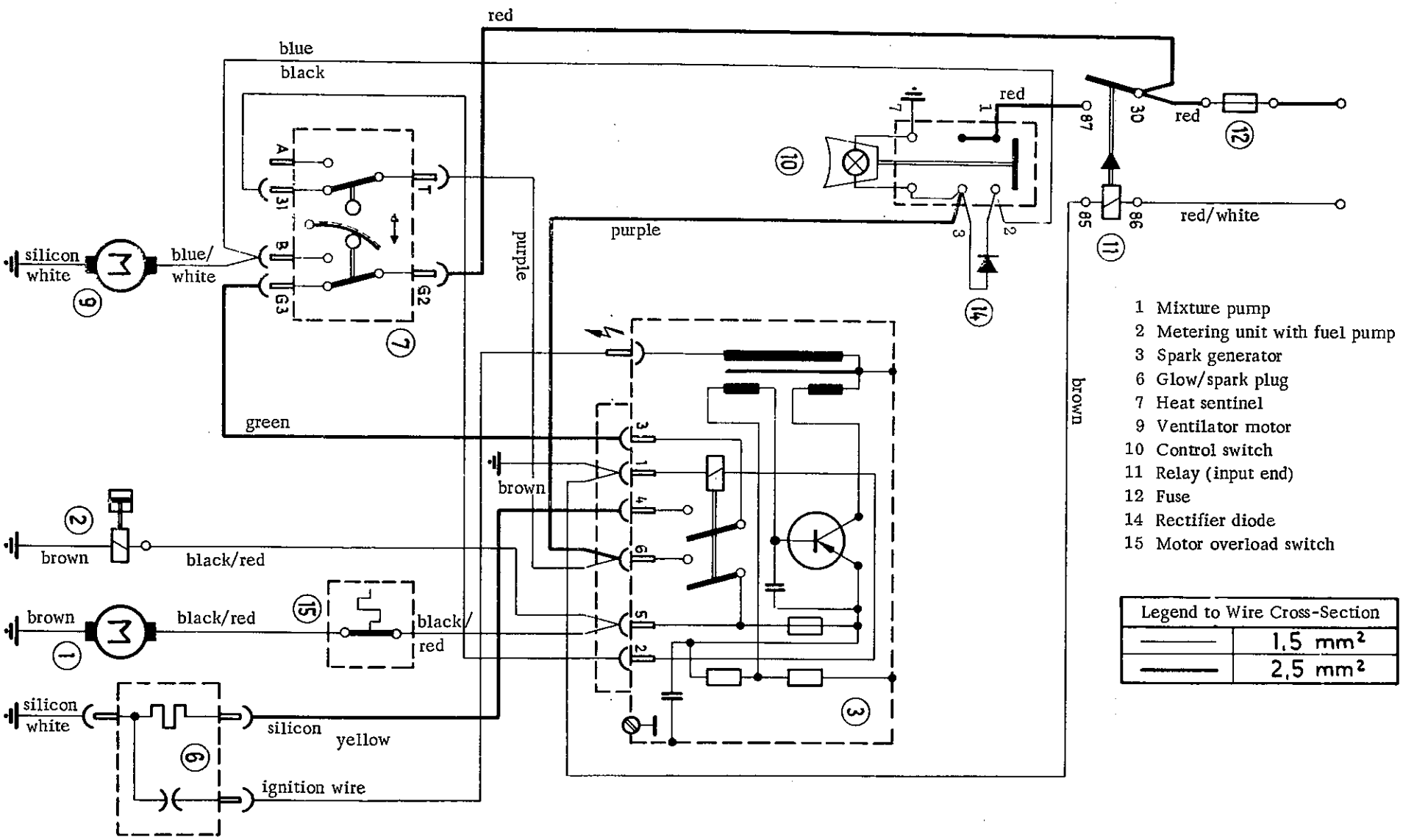

Schematic Diagram

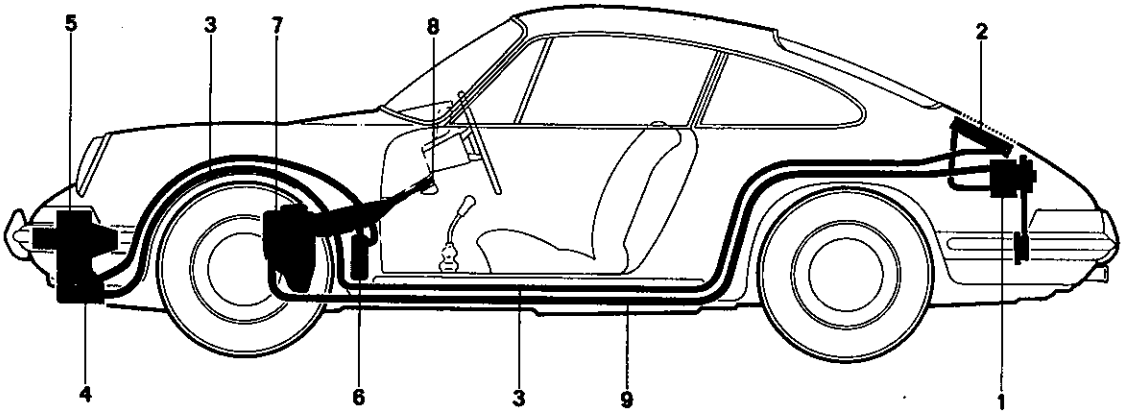

Fig. 1

1 Compressor with electromagnetic clutch
2 Condenser, rear
3 Liquide hose, left
4 Condenser, front
5 Fan for condenser
6 Receiver-drier with filter
7 Evaporator with expansion valve
8 Cold air outlet housing with temperature and blower switch
9 Suction hose, right

DESIGN AND OPERATION

Operation of the Behr Air Conditioner is fully automatic and independent of outside weather conditions and driving speeds. The system is controlled by two switches.

The 3-speed blower switch (right) turns the system "on" or "off", while simultaneously controlling the desired air volume. The temperature switch (left) permits thermostatic control of the cooling output. The system can be operated immediately after starting the vehicle again.

Basically the Behr Air Conditioner consists of the following components: a compressor with magnetic clutch; front and rear condensers; a receiver-drier; an evaporator with expansion valve; and a cold air outlet housing with temperature and blower switch.

The compressor is belt driven by the vehicle engine. An electromagnetic clutch on the compressor is controlled by an infinitely variable thermostat. Depending on the selected cold air outlet temperature, the thermostat switches the fan for the front condenser and the compressor "on" and "off", the latter via the magnetic clutch.

In its vapor phase, the refrigerant of relatively low pressure is compressed in the compressor and forced through the condensors. The absorbed evaporation and compression heat is given up to the outside air passing over condensers, while the refrigerant is simultaneously liquified. The liquid refrigerant flows from the rear condenser via the front condenser into the receiver-drier.

The drier element absorbs small traces of moisture that may be left in the system. From the receiver-drier the refrigerant flows on to the expansion valve. As it passes through the metering orifice of the expansion valve, the pressure and temperature of the refrigerant is reduced. The atomized liquid now enters the evaporator where, because its temperature is lower than that of the surrounding air, the heat exchange takes place. With the increase in temperature, the refrigerant changes to its vapor phase and is returned to the compressor.

The refrigerant for the Behr air conditioner is R-12 (also called Freon 12). The boiling point of R-12 under atmospheric pressure is approx -22°F. R-12 is a non-explosive, non-toxic and practically odorless, chemical compound (dichlorodifluor-methane CF_2Cl_2).

Coolant capacity of complete system:	39 ounces (1100 gr.) R 12
Cold air outlet temperature:	34°F to 41°F (measured at shútter)

Liquefying pressure at engine speed 1000 rpm. Related to air input temperatur measured approx. 4" (10 cm) in front of the center of the rear air entry grill.

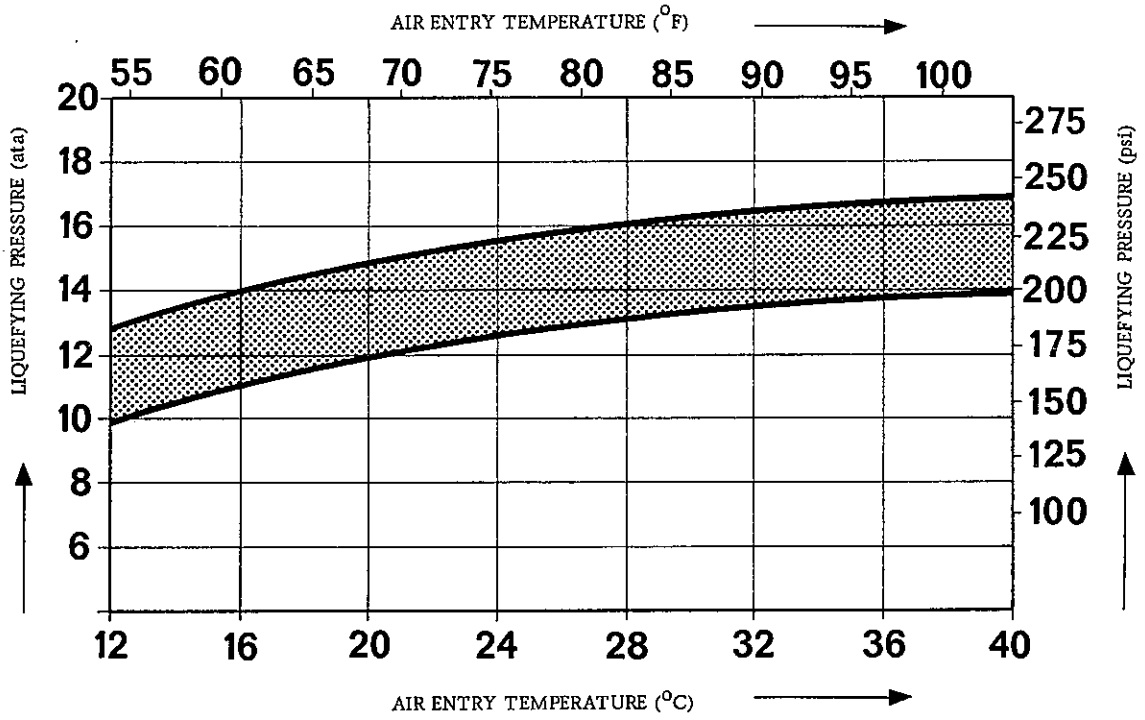

Evaporation pressure at 1000 rpm:	58 to 75,4 in./Hg

Electrical power input at 12 volts (measured at connection plug):

Evaporating blower:	approx. 184 W (blower speed III)
Condenser blower:	approx. 62 W

WIRING DIAGRAM FOR BEHR AIR CONDITIONER

(with 2 condensers)

1 Fusebox I (10 terminal)
2 Fusebox (2 terminal)
3 Standard relay
4 Fan motor (front condenser)
5 Working contact relay
6 Plug coupling (3 terminal)
7 Plug coupling (2 terminal)
8 Blower motor (evaporator)
9 Thermostat
10 Blower switch
11 Temperature switch
12 Electromagnetic clutch
13 Plug connection (single terminal)
14 Ground connection - body

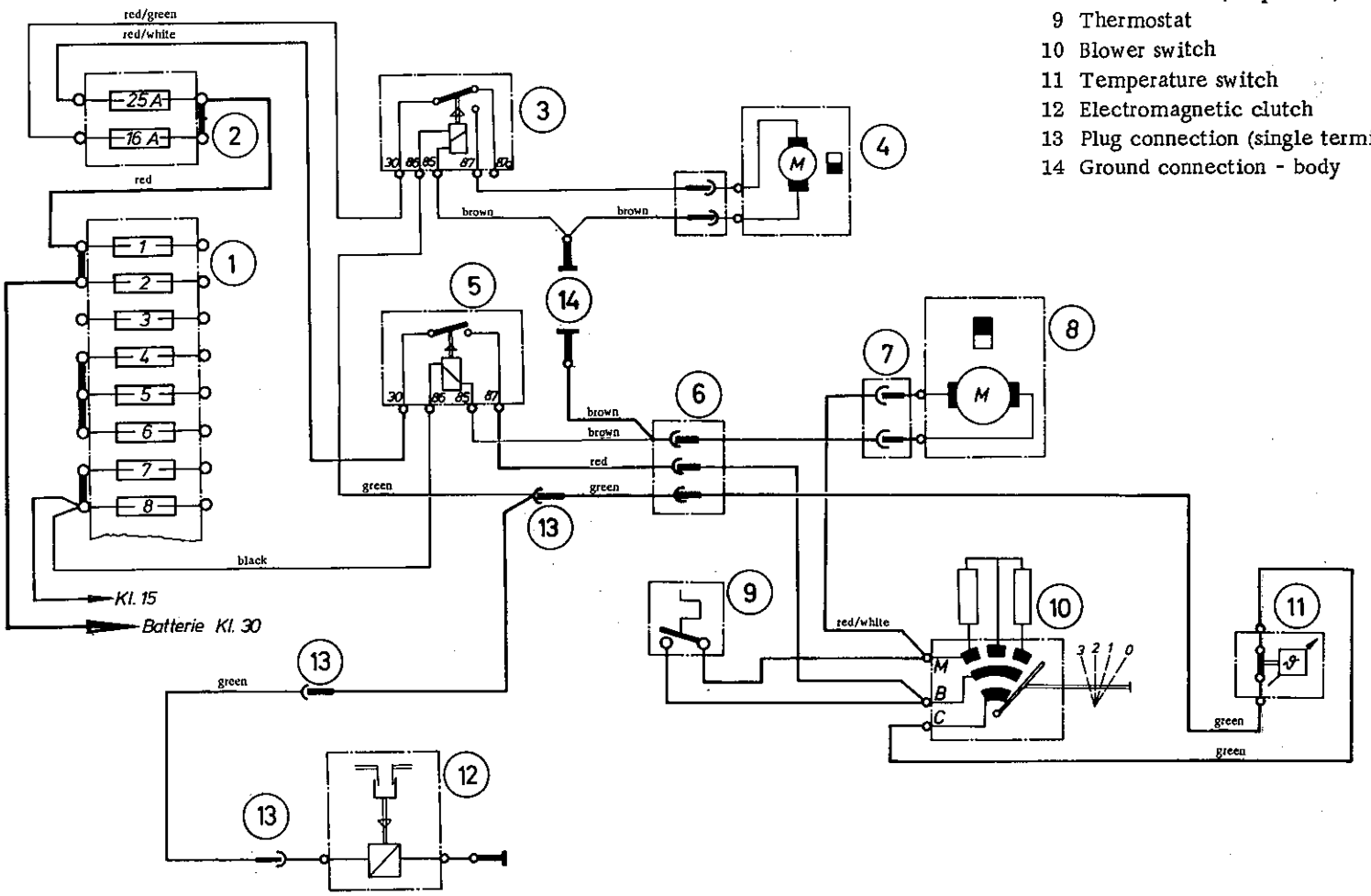

SAFETY PRECAUTIONS - Refrigerant 12

Although Refrigerant - 12 is considered the safest refrigerant for use in automotive air conditioning system, the containers are under considerable pressure at ordinary temperatures. Therefore, the following safety precautions should be observed to prevent personal injury or damage to the air conditioning system.

Serious injury can result if R-12 should enter the eyes. Always wear goggles when working with R-12.

Since R-12 vapor is heavier than air ensure adequate ventilation when working in an enclosed space.

Never weld any part of an air conditioner system unless the system hat been opened and the R-12 dissipated. Failure to do so may lead to the generation of Phosgene (a toxic gas) or an explosion from pressure buildup.

Do not subject refrigerant containers to rough handling, direct flame or sunlight or temperatures above 125°F.

If, when charging a system, it is necessary to increase the vapor pressure, heat the refrigerant container by placing it in a pan of hot water with a temperature not to exceed 125°F. Never apply a direct flame to the refrigerant container.

MAINTENANCE SCHEDULE

The following maintenance schedule applies to vehicles equipped with the Behr air conditioner (with 2 condensers)

300 to 600 miles	6,000 to 6,600 miles	Operation	then every miles
●	●	Check tension of compressor V-belt	6,000
●	●	Tighten compressor mounting bolts	6,000
	●	Clean rear condenser Check front condenser for damage Clean if required	6,000
	●	Remove pedal floor board (right) and remove any debris in intake for evaporator	6,000
●	●	Check refrigerant charge	6,000 *
●	●	Check system operation	6,000 *

* or at least every 6 months

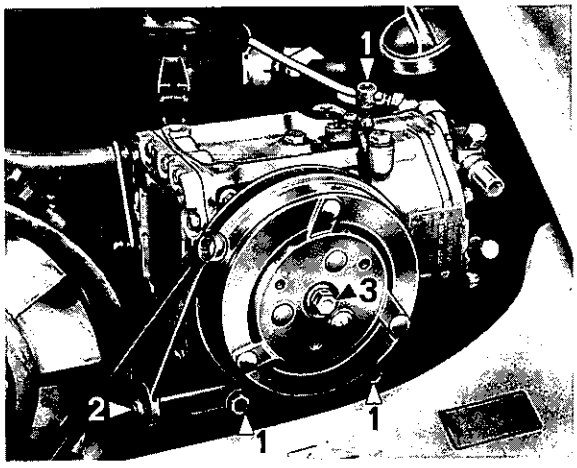

Fig. 2

1 Bolts on compressor mounting assembly
2 Tension nut for adjusting the V-belt
3 Clutch holding bolt

Compressor Drive

Replacing V-belt

Switch "on" ignition and AC blower (so that electromagnetic clutch on compressor engages). Loosen clutch holding bolt (3) and remove pulley with special bolt. Be sure that the woodruff key in the shaft is not lost. Switch ignition "off". Replace V-belt (dimension: 12.5 x 1100 LA). Switch "on" ignition to tighten clutch holding bolt (3). Check V-belt for tension and adjust, if required. Switch "off" ignition and AC blower.

Adjusting the V-belt:

Loosen tensioning nut (2) and mounting bolts (1) on compressor plate (refer to Fig. 2).
Shift compressor by means of tension nut (2). Check V-belt tension. Tighten mounting bolts (1).
Replace worn V-belts.

Checking tension of V-belt:

The V-belt has sufficient tension when it can be depressed approximately 1/16 - 1/8 inch (2 to 3 mm) under slight thumb pressure applied between the two pulleys.

Tightening Bolts of Compressor Mounting Assembly

Check bolts on compressor mounting assembly and tighten if necessary.

Changing the Receiver-Drier

Disconnect hoses from receiver-drier (system must be drained). Remove gaskets and cap hoses, loosen clamps and remove receiver-drier. Use new gaskets for installation.

Cleaning the Condenser

The cooling capacity of the condensers is considerably reduced if clogged with debris.

Cleaning the front condenser

Remove front condenser together with stone guard, but do not loosen hoses. Clean condenser fins with compressed air (refer to Fig. 3).

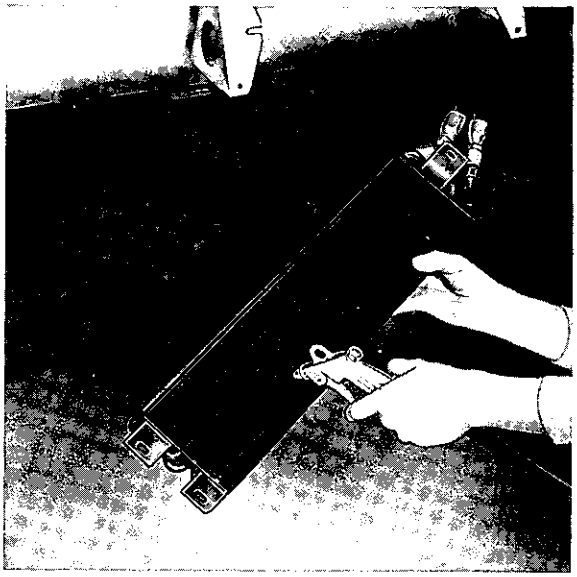

Fig. 3

Cleaning the rear condenser

Open engine compartment lid. Clean condenser fins with compressed air (refer to Fig. 4).

Note:
Operate air conditioner only with the engine compartment lid closed.

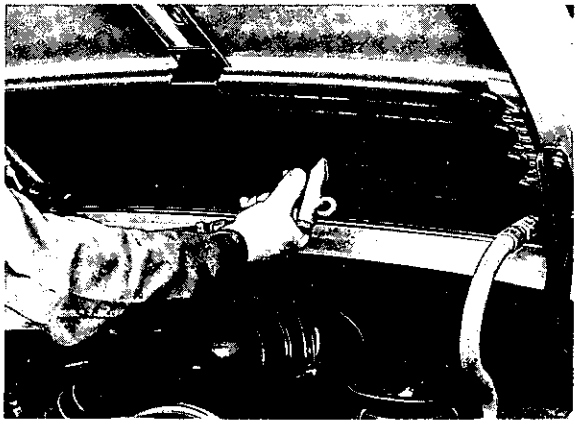

Fig. 4

Checking the Refrigerant Charge

Start engine. Switch "on" air conditioner by turning blower and temperature switches completely to the right. To prevent automatic cut-out of the air conditioner system, open door and switch "on" heater. Unscrew protective cap from sight glass of receiver-drier (receiver-drier is attached under the front left fender). Check refrigeration level in sight glass after approximately 5 minutes of operation. Ball should float on top.

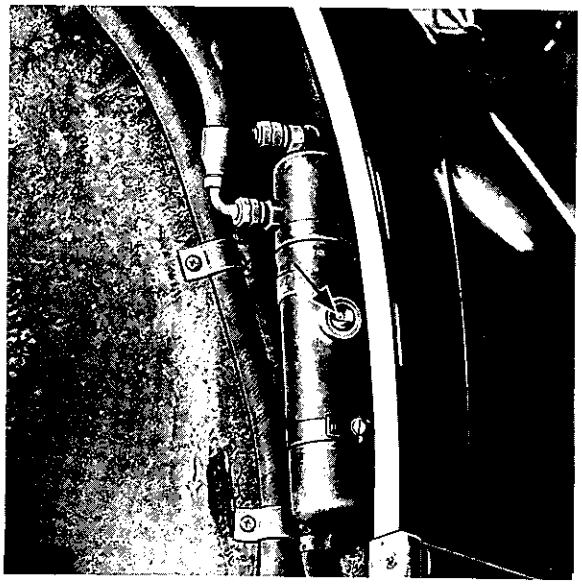

Fig. 5

If ball does not float in sight glass, a refrigerant loss and a leak in the system are indicated. Find cause and repair (for details refer to the Trouble Shooting Chart).

If after 1 year of operation only a slight amount of coolant is gone, simply fill up again.

Checking System for Proper Operation

Start engine. Switch "on" air conditioner. Check operation of blower fan in all speeds. Air volume should increase when the blower switch is shifted from Low to Medium and then to High.

Check operation of condenser fan. Air should be distinctly felt flowing out from under front condenser.

Run engine at approximately 2,000 rpm. Turn blower switch to Medium speed position, temperature switch completely to the right. Close windows and fresh air doors.

Insert thermometer into cold air outlet.

When the air inside the vehicle has cooled and the compressor clutch has engaged and disengaged automatically several times, the air outlet temperature should be 36°F to 43°F.

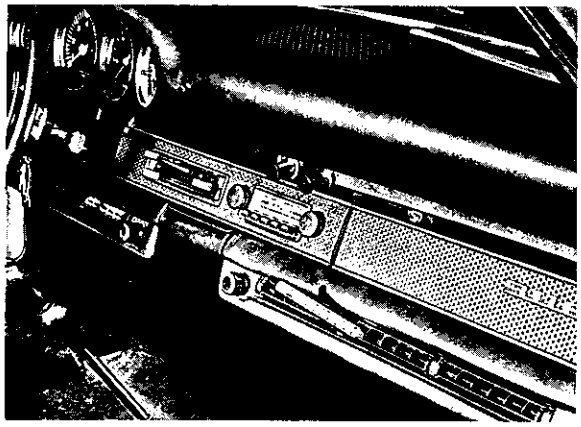

Fig. 6

If the air outlet temperature is too high or too low refer to the Trouble Shooting Chart.

EVACUATION AND CHARGING OF AIR CONDITIONER SYSTEM

(with 2 Condensers)

General

If an air conditioner system has been opened for repairs or if only a small quantity of refrigerant is still in the system, it must be purged and evacuated prior to charging with fresh refrigerant. The same applies to newly installed air conditioners.

Systems that have been open for some time, or for example, were damaged as the result of an accident, coupled with the possibility that moisture has entered into the system, must be flushed prior to evacuation and recharging (refer to "Flushing with Refrigerant R-12").

When the air conditioner system is evacuated, air and any moisture which may have entered are removed from the system.

Moisture is the greatest enemy of an air conditioner system and may result in considerably damage. A few drops of water, if they are not absorbed by the dessicant in the receiver-drier, may result in icing of the expansion valve. This would block the flow of the refrigerant and stop the cooling action. In addition, water in combination with refrigerant R-12 may form acid, which will cause metals to corrode and result in clogging of the small passages and orifices in the system.

It is important that the specified vacuum is attained during evacuation. Any air remaining in the system may result in excessive pressure and prevent full condensation of the refrigerant in the condenser.

Note:

Use a vacuum pump for evacuating the air conditioner system. Do not use the compressor as a vacuum pump.

Use only refrigerant R-12 (dichloro-difluor-methane CF_2Cl_2) for charging the air conditioner system.

Keep service connections and hoses clean and capped when not in use. Do not blow into servicing connections, charging hoses or other parts of the system by mouth or with compressed air. Use only refrigerant R-12 or nitrogen for purging.

Always use special care and cleanliness when working on refrigeration systems.

Warning!

Wear goggles when working with refrigerants.

Connections on Compressor

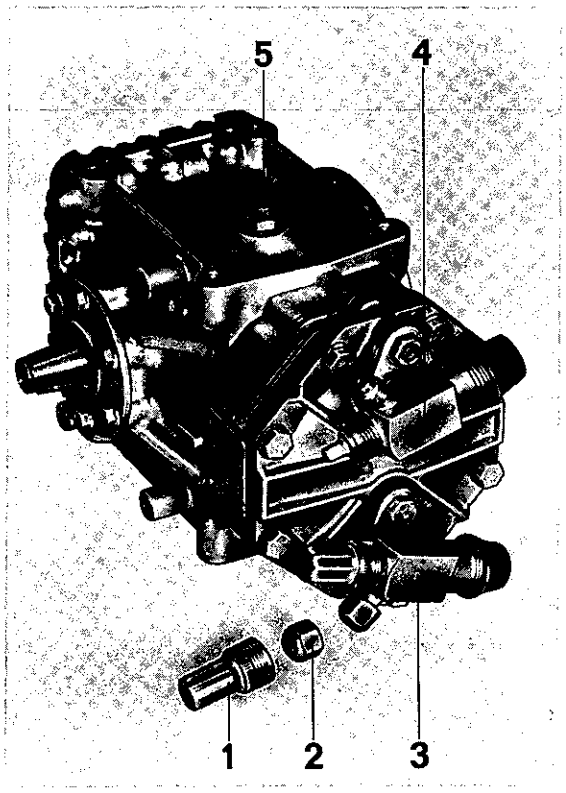

Fig. 7

1 Protective cap (valve spindle)

2 Protective cap (service gauge port)

3 Service valve (suction)

4 Service valve (discharge)

5 Oil inspection plug

Operation of Service Valves

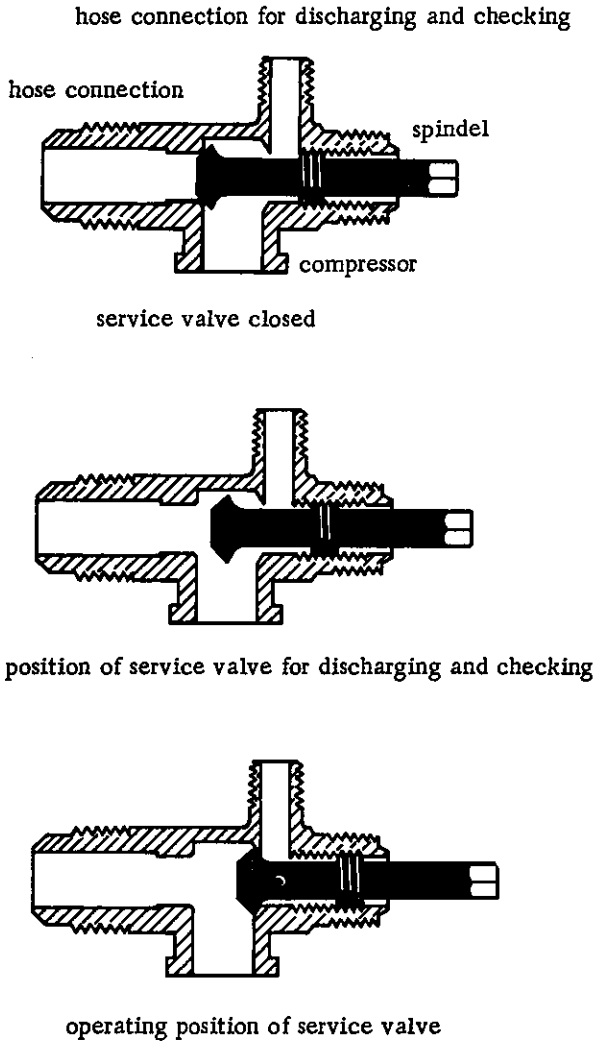

Fig. 8

Connection of Fittings for Evacuating and Charging the System

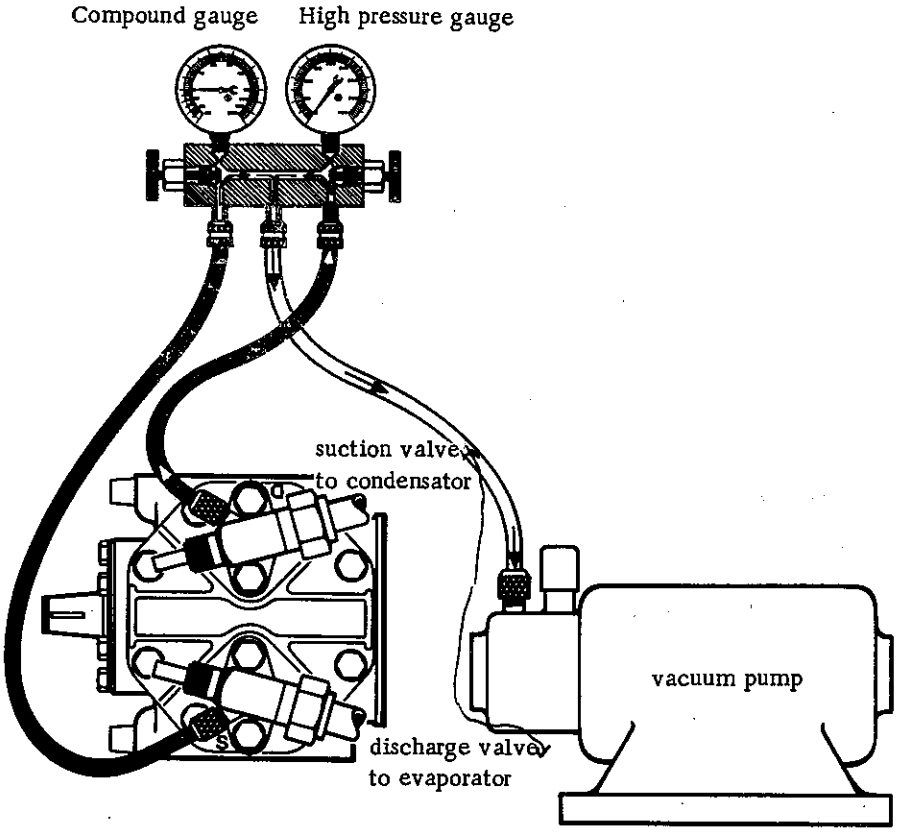

Fig. 9

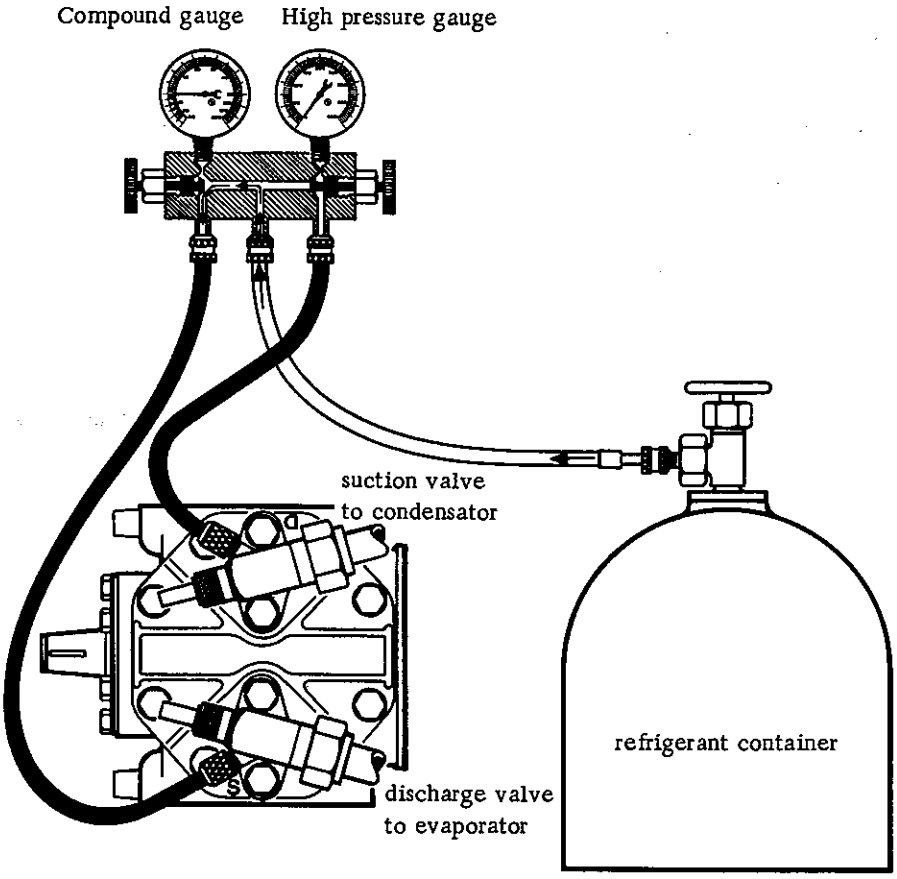

Fig. 10

Evacuating the System

1. Shut off vehicle engine.

2. Check operation of evaporator blower and electromagnetic clutch.

3. Check compressor oil level. (Refer to "Compressor Oil Check").

4. Unscrew protective caps from service valves on compressor (refer to Fig. 7).

5. Connect hoses of manifold gauge set (refer to Fig. 9). Connect hose from compound gauge to suction service valve (designation on cylinder head "Suction").

   Connect hose from high pressure gauge to discharge service valve (designation on cylinder head "Discharge").

   Connect center hose to vacuum pump.

6. Turn spindles of both service valves completely "out" (counter-clockwise), then "in" for approximately 1 - 2 turns (clockwise).

7. Open both hand valves on manifold gauge set.

8. Switch on vacuum pump and evacuate system until low pressure gauge of manifold gauge set indicates approximately 28" mercury (HG).

9. Close both hand valves of manifold gauge set, then switch off vacuum pump.

10. Vacuum test

    If the vacuum reading is held for approximately 10 minutes, the system has no major leaks.

Charging the System

1. Start vehicle engine and set to fast idling speed (approximately 1,000 rpm).

2. Close engine lid, making sure that the hoses are not squeezed shut.

3. Place refrigerant container on a scale having a 2 ounce (50 gr.) graduation (refrigerant container must be positioned with valve up).

   When using a charging cylinder, set refrigerant level on correct scale and mark.

4. Switch "on" air conditioner system: turn blower temperature switch completely to the right.

5. Slowly open hand valve on manifold gauge set (suction side) and permit refrigerant to enter.

6. Watch sight glass in receiver-drier (receiver-drier is attached under front left fender). As soon as the ball in the sight glass rises, close hand valve on manifold gauge set (suction side).

7. Run air conditioner system for approximately 5 minutes, then check refrigerant level in sight glass. Add refrigerant if required.

   Ball must float on top. Refrigerant charge: 39 ounces (1100 gr.) check quantity on scale.

   Caution:
   To preclude any possibility of damaging compressor, do not overcharge the air conditioner system.

8. Check operating pressures (refer to output diagram). Check cold air outlet temperature and temperature switch setting.

9. Stop engine, close refrigerant container. Turn spindles of service valves completely out (operating position).

   Detach manifold gauge set hoses, cover compressor service valves and ports with protective caps.

Flushing with Refrigerant R-12

General

Upon completion of repairs to the system, it must be flushed with refrigerant.

Check oil level in the compressor. In systems which were open for an extended period it is advisable to change the compressor oil.

1. Shut off vehicle engine.
2. Connect hoses of manifold gauge set to compressor (refer to Fig. 10).
3. Start vacuum pump. Upon reaching the lowest vacuum reading, continue to evacuate for another 10 minutes.
4. Close both valves of manifold gauge set. Stop vacuum pump and remove hose.
5. Connect refrigerant container to center hose. Open refrigerant container. Loosen center hose on manifold slightly, permit air to escape from hose until refrigerant flows out, then tighten connection.
6. Open suction valve of manifold slowly and permit refrigerant to enter until the pressure gauges of the manifold are stabilized.
7. Close refrigerant container and suction valve of manifold.
8. Start vehicle engine and set to fast idling speed. Close engine lid, making sure that the hoses are not squeezed shut. Start air conditioner and operate for approximately 10 minutes.
9. Stop vehicle engine and air conditioner.
10. Drain refrigerant (refer to "Draining of System").
11. Change receiver-drier, evacuate and charte air conditioner system.

Leak test

The largest portion of all repair work on air conditioners consists of determining and repairing leaks.

Vibrations and shocks on the vhicle will cause leaks, particularly on hose and tubing connections. Such leaks can be quickly repaired by tightening the connections or changing the gaskets.

Leak Detecting Equipment

Various models of leak detectors may be used in air conditioner systems for finding leaks. The instructions of the manufacturers of such equipment must be observed. Electronic leak detectors should be preferred, since they are more accurate and safer than detectors using an open flame.

If an air conditioner system looses a considerable quantity of refrigerant within a service period, the system should be checked for leaks. Upon completion of repairs or upon installation of a new air conditioner system, a leak test is absolutely vital.

1. Put leak detector in operation.

2. Pass detector hose or probe slowly along refrigerant hoses, hose connections, condensers, etc. Since refrigerant R-12 is heavier than air, the detector hose or probe must be passed below the parts to be checked.

3. To check the evaporator for leaks, hold detector hose or probe against opening of condensate drain plug.

Draining the System

The air conditioner system must be drained prior to starting repairs. Be sure to observe the respective safety instructions. Drained air conditioner systems must be capped immediately to prevent the entry of dirt and moisture.

Caution:

Never operate an air conditioner system that has been drained.

1. Shut off vehicle engine.

2. Connect hoses of manifold gauge set to compressor. Suspend center hose in downward direction and cover with a rag.

3. Close both valves on manifold gauge set rotate spindles of both service valves inward approximately 1 - 2 turns.

4. Open high side hand valve on manifold gauge set slowly, permit refrigerant to flow out while making sure that no oil is carried along from the compressor and blown out. Reduce valve opening if required.

5. When the pressure gauge at pressure end of filling fitting has dropped to approx. 3 atü (42 psi), open valve on suction end of filling fittings slowly, making sure that no cold flowing oil escapes. Throttle valves, if required.

6. Watch pressure gauges of filling fittings. As soon as the pressure drops, slowly continue opening valves until the pressure gauges indicate 0 pressure.

   Upon completion of the repair work, evacuate air conditioner system again and fill up.

Adding Refrigerant to the System

If after a long period of operation only a slight amount of refrigerant is missing and no leaks are found in the system, only a partial recharge of the system is required.

1. Shut off vehicle engine, connect hoses of manifold gauge set to compressor (refer to Fig. 10). Connect refrigerant container to center hose.

2. Open refrigerant container. Open both hand valves on manifold gauge set. Loosen hoses on service valves slightly, permit air to escape from hoses until refrigerant flows out. Then tighten connections. close both valves on manifold gauge set.

3. Screw both spindles of service valves in 1 - 2 turns (clockwise).

   Recharge system (as described in section "Charging the System", Items 1 - 8) to compensate for loss.

4. Stop engine, close coolant bottle, screw spindels of angle valve out completely (operating position), disconnect filling hoses, close valves on compressor with caps and locking nuts.

Compressor Oil Check

General

All compressors are supplied by the manufacturer completely charged with oil and protective gas.

Always check the oil level in a compressor prior to connecting it into the system or upon completion of repairs to the system. Check oil level again after putting air conditioner system in operation following a minimum operating period of 10 - 12 minutes.

Note

For refills of oil changes use refrigerant oil "Texaco Capella B Inhibited or 3 G Dual-Inhibited (Sun Oil Company)" only.

Checking Oil level with System Charged

1. Be sure vehicle engine is not running.
2. Connect manifold gauge set. Connect center hose to refrigerant container.
3. Open refrigerant container. Open both hand valves on manifold gauge set. Loosen hoses on service valves slightly, permit air to escape from hoses until refrigerant flows out. Then tighten connections.
4. Close both hand valves on manifold gauge set and refrigerant container.
5. Screw spindels of both service valves completely out. (Normally, both valves are already in this position.)
6. Start vehicle engine and run at idling speed.
7. Engage air conditioner.
8. Slowly rotate spindle of service valve inward (suction side) until suction pressure reads 0 or a little below, then screw spindle completely in and stop engine immediately.
9. As soon as the suction pressure has increased slightly above 0, screw spindel of service valve (discharge side) completely in.
10. Unscrew oil inspection plug slowly, bleed off residual pressure carefully. Remove oil inspection plug and seal.

11. Check oil level with oil dipstick (add refrigerant oil according to chart).

12. Clean sealing surface. Screw oil inspection plug with seal for approximately 2 - 3 turns. Slowly unscrew (counterclockwise) spindle of service valve (suction side). Parge air from compressor until refrigerant emerges on oil inspection plug. Tighten oil inspection plug to a torque of 28 ft.lb. (4 mkg).

13. Back seat both service valves completely. Start vehicle engine. Engage air conditioner and check refrigerant level after approximately 5 minutes of operation. Add refrigerant if required.

Inspection of Oil Level prior to Operating System

(Refrigerant discharged from system)

1. Slowly open oil inspection plug and permit protective gas to escape from compressor.

2. Remove oil inspection plug and seal.

3. Check oil level with dipstick. Add refrigerant oil according to chart if required.

4. Clean sealing surface, screw in oil inspection plug together with seal.

Oil Level Chart

Oil level filled by manufacturer inches (mm)	Oil level following operation, inches (mm)	
	Minimum	Maximum
1 3/16 (30)	13/16 (21)	1 3/16 (30)

TOOLS REQUIRED FOR SERVICE AND REPAIRS OF BEHR AIR CONDITIONER SYSTEMS

Available from: "Dealers in Refrigerating Equipment"

Description	Application
Rachet with extension, socket with 1/4" quare opening.	Actuation of service valves
Special bolt	Removal of electromagnetic clutch from compressor
Line connector - 7/16"	Connector for refrigerant container charging hose
Manifold gauge set	Checking, charging and draining of system
Vacuum pump	To evacuate system in combination with manifold gauge set
Electronic leak detector for Freon and Halide gases	Checking of system for leaks
Technical thermometer	Checking evaporator air outlet temperature
Goggles	To protect eyes when working with refrigerant - 12
Oil dipstick	Checking of oil level in compressor
Oil can, pressure type	For refrigerant oil

Replacement of Electromagnetic Clutch

Removal

1. Switch "on" ignition and blower switch (to permit engagement of clutch).
2. Unscrew clutch holding bolt - item 3 (refer to Fig. 2).
3. Switch "off" ignition and blower switch.
4. Loosen V-belt (to permit shifting compressor to the left. Loosen mounting bolts and screw tensioning nut back).
5. Remove clutch hub with special bolt.
6. Remove woodruff key from compressor shaft.
7. Disconnect coil cable.
8. Unscrew stationary field screws.
9. Remove stationary field.

Installation

1. Install stationary field with new screws (since expanding screws can be used only once) 9 ft.lb. (1.35 mkg).
2. Connect cable of holding coil to terminal on compressor.
3. Insert woodruff key on compressor shaft.
4. Attach clutch hub with belt in position and secure with clutch holding bolt.
5. Switch "on" ignition and blower switch.
6. Tighten clutch holding bolt.
7. Switch "off" ignition and blower switch.
8. Adjust V-belt tension (refer to maintenance services).

Replacement of Compressor:

Removal

1. Drain system (refer to page STRA 27).
2. Close both service valves on compressor (turn spindles completely in front seated). Remove hoses of manifold gauge set.
3. Remove electromagnetic clutch (refer to page STRA 32).
4. Disconnect and remove upper hose (discharge side).
5. Remove gasket and cap hose.
6. Loosen tensioning nut - item 2 (refer to Fig. 2).
7. Unscrew mounting bolts - item 1 (refer to Fig. 2).
8. Lift compressor from its guides and pull over to the end plate (refer to Fig. 11). Use rag to protect paintwork.
9. Disconnect and remove bottom hose (suction side).
10. Remove gasket and cap hose.
11. Remove compressor plate.

Installation

1. Attach compressor plate to compressor, tighten bolts to 28 ft.lb. (4 mkg).
2. Fit bottom hose connection with new gasket. Be sure that the sealing cones are uniformly seated.
3. Place compressor on carrier.
4. Loosely screw mounting bolts down, so that compressor can still be shifted.
5. Fit upper hose connection with new gasket (watch sealing cone).
6. Install electromagnetic clutch.
7. Connect electric cables.
8. Tension V-belt (refer to page STRA 18).
9. Tighten mounting bolts.

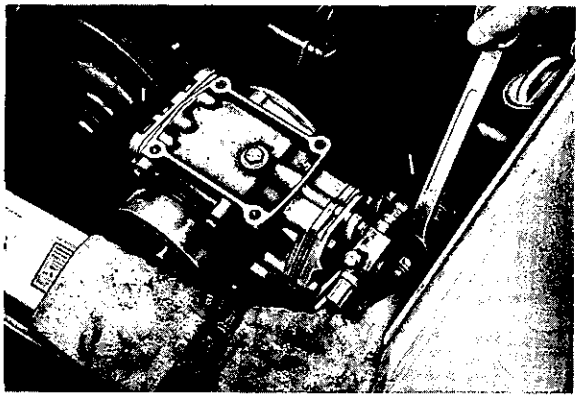

Fig. 11

Replacement of Front Condensers

Removal (refer to Fig. 12)

1. Drain system (refer to page STRA 27).

2. Loosen coupling nuts at condenser fittings, use back up wrench.

3. Pull off hoses and close with plugs after removing gaskets.

4. Remove the 2 condenser mounting hexagon nuts in the front luggage compartment (at right and left next to air baffle plate).

5. Remove stone guard, condenser and hexagon screws.

Note:

If the condenser sticks to vehicle floor, carefully remove by applying a wide screwdriver blade against its mounting lugs.

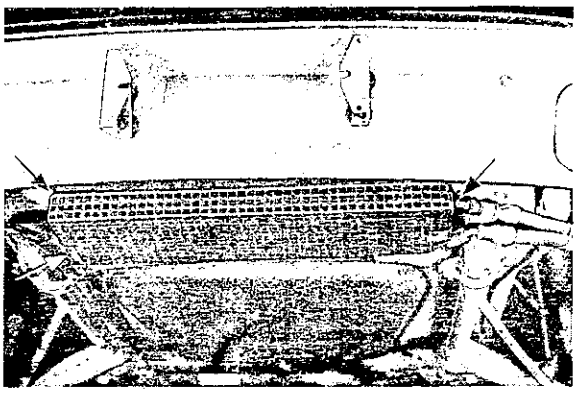

Fig. 12

Arrows show position of the mounting bolts.

Installation

For installation of stone guard with condenser reverse the procedure and not the following: Carefully insert seals between condenser and luggage compartment floor to prevent air leaks. When attaching the hose connections, be sure that the sealing cones are seated uniformly. Always use new gaskets.

Replacement of Rear Condenser

Removal

1. Drain system (refer to page STRA 27).

2. Loosen coupling nuts at condenser fittings, use back up wrench.

3. Pull off hoses and close with plugs after removing seals.

4. Loosen angle bracket on center web of engine compartment lid.

5. Remove screw connections on both lid hinges and remove condenser.

Installation

For installation of condenser reverse the procedure and note the following: When connecting the hoses to the condenser, be sure that the sealing cones are seated uniformly. Always use new gaskets.

Replacement of Cooling Blower for Front Condenser:

Fold back mats in front luggage compartment and remove both battery ground straps.

Removal

1. Disconnect fan wires at connection plug.
2. Remove rubber clamping strap.
3. Pull ventilating outlets of fan out of air duct with a light, rotating motion (refer to Fig. 13).
4. Pull fan (in direction of passenger compartment) out of seal in front bulkhead.
5. Check condition of seal and replace if required.

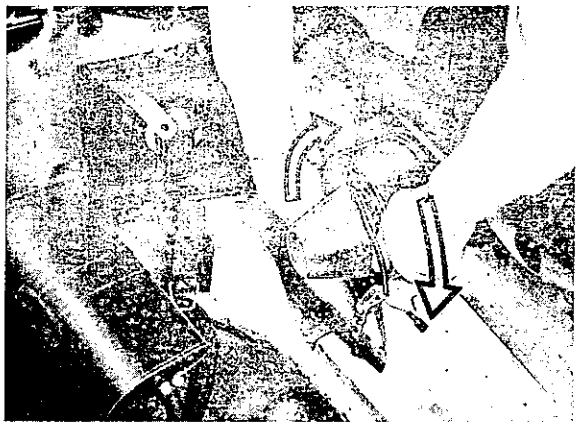

Fig. 13

Installation

1. Push round fan outlet through seal in front bulkhead until outlet can be introduced into air box opening by a rotating motion.

   Note:
   Be sure that the seal on the air guide box is not damaged or torn loose.

2. Attach rubber clamping strap.
3. Connect fan wire to plug connection.
4. Check fan for operation (refer to page STRA 20).

Replacement of Electric Motor for Condenser Fan:

Removal

1. Remove condenser fan.
2. Unscrew mounting screws of fan cover.
3. Pull cover from cable sleeve.
4. Loosen hexagon socket screw in fan wheel hub and remove fan wheel.
5. Loosen clamping strap and remove motor.

For installation of the fan motor reverse the procedure.

Removal of Evaporator Housing

1. Drain system (refer to page STRA 27).
2. Remove right floor mat in passenger compartment.
3. Remove pedal floor board.
4. Unscrew Philips head screws for grating and remove grating.
5. Carefully pull out plastic duct.
6. Pivot bolt on bottom of front luggage compartment and open flap.
7. Loosen hose clamp of air flex hose and push hose from adapter on evaporator housing.
8. Pull temperature sensor from its guide tube in evaporator housing.
9. Loosen hose connections on expansion valve .
10. Pull off hoses and close with plugs after removing gaskets.
11. Disconnect blower motor cable plug at terminal.
12. Remove screw connections of mounting bracket on body.
13. Remove evaporator housing from cavity.

    Caution:
    Do not damage air flex hose and temperature sensor.

Installation of Evaporator Housing

Reverse procedure to install evaporator housing and note the following: Tighten fastening brackets of evaporator housing only upon assembly of plastic socket (right side). Carefully connect hoses with new gaskets.

Replacement of Evaporator

Removal

1. Remove evaporator housing.
2. Push off clamps in lateral direction and remove cover.
   Note:
   Clamps can be removed in one direction only!
3. Remove evaporator from its housing.

Installation

For installation of evaporator reverse the procedure.

Replacement of Evaporator Blower Motor

Removal

1. Remove evaporator housing.

2. Push clamps off in lateral direction and remove cover.
   Note:
   Clamps can be removed in one direction only!

3. Unscrew blower motor base plate.

4. Pull cable from blower motor.

5. Remove clamps of blower motor. Take motor out in direction of blower wheel.

Installation

Reverse the procedure for installation of blower motor. For proper seating of clamps refer to Fig. 14.

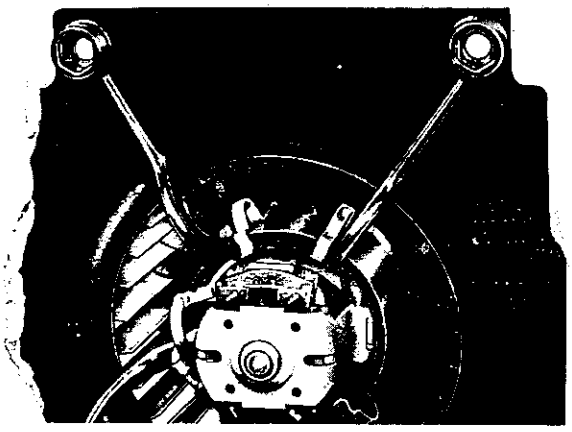

Fig. 14

Replacement of Expansion Valves

Removal

1. Drain system (refer to page STRA 27).

2. Pull insulating compound from expansion valve.

3. Remove clamp (holder for temperature sensor on connecting pipe of evaporator).

4. Unscrew coupling nuts of hose lines and compensating line.

5. Remove expansion valve. Remove gaskets and cap hoses.

Installation

Reverse procedure for installation of expansion valve.

Note:

Maintain good metallic contact between temperature sensor and tail pipe of evaporator. Fit hose connections carefully. Always use new gaskets.

REPLACEMENT OF PARTS ON COLD AIR OUTLET HOUSING

Removal of Cold Air Outlet Housing

1. Remove ground strap on both batteries.

2. Disconnect plug connections in cavity near evaporator.

3. Remove cable sleeve from partition and push cable assembly into passenger compartment.

4. Loosen clamping strap of air flex hose on evaporator housing. Push air flex hose back so that temperature sensor line moves easily between the evaporator housing and the hose.

5. Carefully pull temperature sensor line out of guide tube in evaporator housing.

6. Unscrew mounting screws of cold air outlet housing.

Note

When removing the cold air outlet housing, be sure that the temperature sensor line is not caught or bent.

Installation of Cold Air Outlet Housing

Reverse procedure for installation of cold air outlet housing.

REPLACEMENT OF TEMPERATURE SWITCH

Removal

1. Remove cold air outlet housing.

2. Pull knob from temperature switch (left = temperature switch; right = three-speed blower switch).

3. Unscrew hex. nuts and remove washer.

4. Unscrew mounting screws of left upholstery molding until the molding can be removed.

5. Push upholstery molding away from temperature switch.

6. Pull temperature switch out of housing until cable connections are accessible.

7. Disconnect cable.

8. Carefully straighten temperature sensor line for easy removal through common cable jacket.

Note

In the housing are cable terminals (identified by round elevation on housing top) which must be straightened, if necessary.

Installation

Reverse procedure for installtion of temperature switch and note the following:
When tightening the mounting screws for the upholstery molding, align bearings so that the louvers operate uniformly and smoothly.

Adjustment of Temperature Switch:

1. Remove cold air outlet housing.

2. Pull off knob of temperature switch (left = temperature switch; right = three-speed fan switch)

3. Unscrew hex. nut and remove washer.

4. Unscrew mounting screws of left upholstery molding until the molding can be removed.

5. Push upholstery molding away from temperature switch.

6. Pull temperature switch out of housing until right switch end is accessible. (Left switch end= temperature sensor connection; right switch end = Pertinax plate).

7. Push off Pertinax plate at right switch end.

8. Perform temperature corrections by turning the set screw. Turing in direction "cold" = colder. Turing opposite to direction "cold" = warmer. 1 turn of set screw corresponds to approximately $5^{o}F$ ($3^{o}C$).

Replacement of fan switch:

Removal

1. Remove cold air outlet housing.

2. Pull knob from fan switch (Left = temperature switch; right = three-speed fan switch).

3. Unscrew hex. nuts and remove washers.

4. Unscrew mounting screws of right upholstery molding until the molding can be removed. (The three louvers with their bearings should not be removed, since they are accurately spaced by washers.)

5. Push upholstery molding away from blower switch.

6. Pull fan switch out of housing until cable connections are accessible.
   Caution:
   Do not tear off thermostat glued to side of housing.

7. Disconnect cable and pull out switch.

Installation

Reverse procedure for installation of blower switch and note the following:
When tightening the mounting screws for the upholstery molding, align bearings so that the louvers operate uniformly and smoothly.

TROUBLE SHOOTING CHART

BEHR AIR CONDITIONER (with 2 condensers)

Symptom	Possible Cause	Remedy
I NO COOLING OUTPUT		
None or insufficient refrigerant in system	System leaks	Check system (sight check), evacuate and fill with approx. 7 ounces (200 gr.) refrigerant. Check system with leak detector for leaks, repair. Adjust refrigerant to correct level. Check oil level in compressor. If the system has been empty for an extended period, damaged by an accident or opened, always replace receiver-drier.
V-belt slipping or missing	V-belt loose or broken	Tighten V-belt or replace.
Electrical components not operating	Fuse blown	Replace fuse
	Wires loose or broken	Check wires and connections and replace if required.
	Switches defective	Check switches, replace defective switches.
	Electromagnetic clutch not operating	Check electromagnetic clutch for continuity. Replace if required.
Evaporator fan motor not running	Fan motor or switch defective	Check electrical connections, replace defective parts.
Compressor crankshaft not turning	Compressor defective	Replace compressor.
Discharge pressure normal or too high, suction pressure too low	Expansion valve clogged	Clean filter in expansion valve and replace expansion valve if required. Remove blockage, flush system. Drain refrigerant, flush system, replace receiver-drier.
Differential between suction and discharge pressure too low (Observe data in technical data sheet)	Cylinder head gaskets or compressor valves defective	Replace cylinder head gaskets or valve plate

Symptom	Possible Cause	Remedy
Insufficient refrigerant in system	Leak in system	Check system for leaks, add refrigerant, check oil level in compressor.
Suction pressure too high, discharge pressure too high	System overcharged	Reduce refrigerant to correct level
Insufficient air at outlet with fan at highest speed	Evaporator iced up; Temperature switch defective or temperature switch capillaries bent	Replace temperature switch
	Temperature switch thermosat setting too low	Set temperature switch thermostat as required: remove temperature switch, pull off Pertinax plate. Turn set screw in direction of arrow "cold" One turn approximately 5°F (3°C).
	Temperature switch capillaries incorrectly installed	Insert capillaries completely into pipe between evaporator fins.
	Fan motor defective	Replace fan motor.
	Fan switch defective	Replace fan switch.
	Bad ground connection	Check connection.
	Evaporator fins clogged	Clean evaporator with compressed air.
	Air guide hose or duct leaks	Check and correct air guide assembly.
V-belt slips	V-belt loose	Tighten V-belt
	System overcharged	Adjust refrigerant to correct level.
	Condenser contaminated	Clean condenser.
	Fan for front condenser inoperative	Check electrical connections, replace defective parts.
Cooling effect drops as speed increases	Fresh air flap open	Close fresh air flap.
Air cooling insufficient, clutch cuts out too soon	Temperature switch thermostat maladjusted	Temperature switch thermostat must be adjusted correctly. Remove temperature switch. Pull off Pertinax plate. Turn set screw in direction of arrow "cold". One turn approximately 5°F (3°C).

Symptom	Possible Cause	Remedy
Air cooling insufficient discharge pressure normal or slightly low,	Strainer in expansion valve clogged Moisture in system	Remove expansion valve, clean and replace, if required. Clean system. Clean system, replace receiver-drier.
Discharge pressure normal or low, suction pressure high	Cylinder head or valve plate gasket broken, valve defective or valve plate broken	Replace gaskets or valve plate.
Discharge pressure high, suction pressure normal	Moisture in system Condensers dirty. Fan for front condenser inoperative	Drain refrigerant, replace receiver-drier. Evacuate system and recharge. Clean condenser fins with compressed air. Remove front condenser, but do not loosen hoses.
Heavy knocking in compressor	Connecting rods loose or rod bearing worn out, piston broken	Replace compressor.
Metallic ticking in compressor	Broken valve	Replace valve plate.
Clutch noisy when disconnected	Return spring of clutch too weak, clutch bearings defective Mounting bolt loose	Replace clutch.
Clutch engages and disengages in rapid sequence	Winding defective (Coil body has loose contacts) Temperature switch defective	Replace clutch Replace temperature switch
V-belt drags or whips	V-belt loose or worn Excessive refrigerant charge in system	Tighten V-belt or replace Reduce refrigerant to correct level
Knocking noises in compressor (liquid refrigerant knock)	Expansion valve stuck in open position Sensor of expansion valve not correctly attached to evaporator outlet or loose	Replace expansion valve Attach sensor to intake pipe with clips. Sensor must have metallic contact.

Symptom	Possible Cause	Remedy
Dull noise in compressor, increased discharge and suction pressure	Too much refrigerant in system Fan for front condenser inoperative	Adjust refrigerant to correct level. Check electrical connections, replace defective parts.
Compressor mounting causes noise (heavy humming or drumming	Compressor mounting loose Compressor mounting broken	Check mounting bolts and tighten Replace broken parts.
Hissing noises in expansion valve	Not enough refrigerant in system	Charge with refrigerant.
Compressor too loud, crankcase too hot	Oil level too low No refrigerant in system	Add oil Recharge with refrigerant.
Blower noisy	Blower motor worn Fan wheel scraping	Replace blower motor Check mounting of blower motor, align and tighten. Check fan wheel for runout and replace if required.

SUBSEQUENT INSTALLATION OF WEBASTO P 1018.04 AUXILIARY HEATER IN TYPE 911 VEHICLES FROM 1969 MODEL ON

Installation

1. Place car on dolly.

2. Remove luggage compartment mat.

3. Detach both ground straps from the two 12 V batteries.

4. Remove instrument panel rear cover from luggage compartment.

5. Replace heater compartment lid seal with a heat resisting seal.

6. Install asbestos lining in heater compartment lid.

7. Remove both hot air ducts (left and right of blower).

8. Pull wire loom from the heater compartment to the luggage compartment through the hole provided. Slide grommet in from top. Lead along the instrument panel to fuse box N° 1 (note wire branch for actuating switch) and connect to fuse N° 2.

9. Attach ground wire (brown) to retaining bolt of body center panel support.

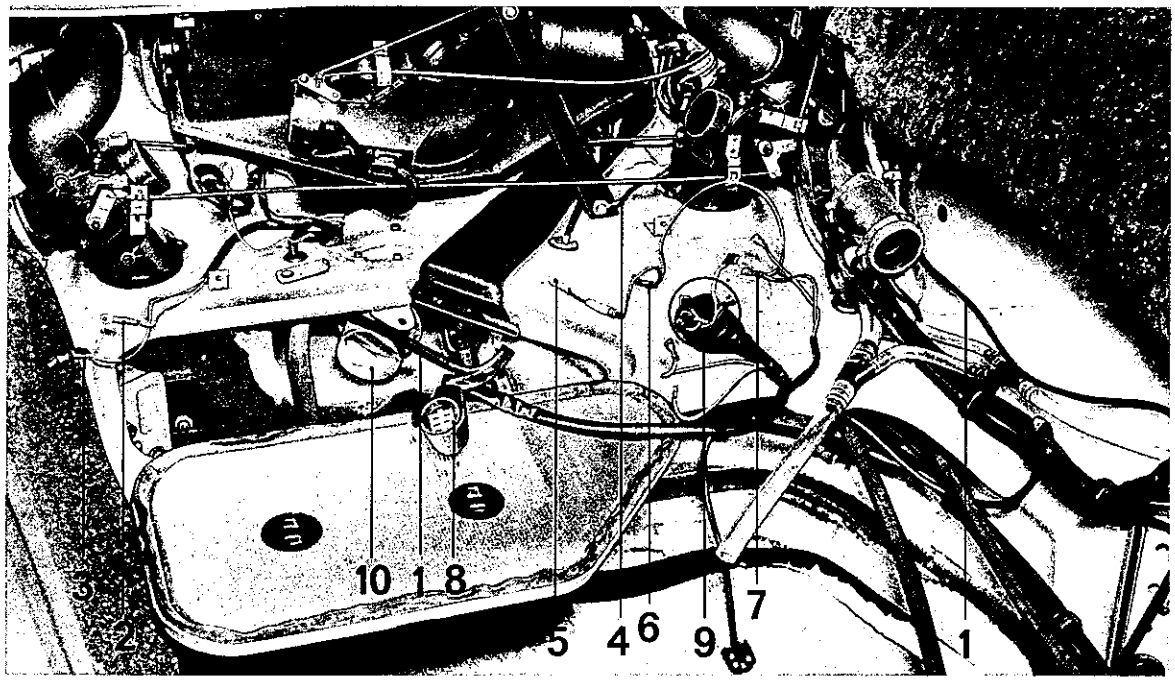

1 Wire loom
2 Fuel pump connection
3 Ground wire, 2-pole
4 Ground wire
5 Ground wire to spark generator (ground wire extension from heater thermostat)
6 Ground wire, to blower housing
7 Ground wire, to mixture pump
8 Multiple connector to spark generator
9 Connections for safety switch
10 Duct flange with thermo-gate

10. Remove right control box.

11. Secure fuel pump holder with 4 sheetmetal screws, drilling at pre-marked points.

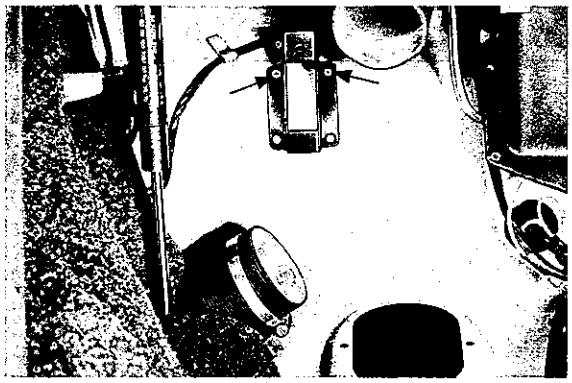

12. Taking hose from the kit, cut a 19 cm long fuel mixture hose, and a 60 cm long air supply hose. Use the remainder of ca. 95 cm length as the long fuel mixture hose.

13. Push fuel, mixture, and air hoses onto the fuel pump and secure with hose clamps.

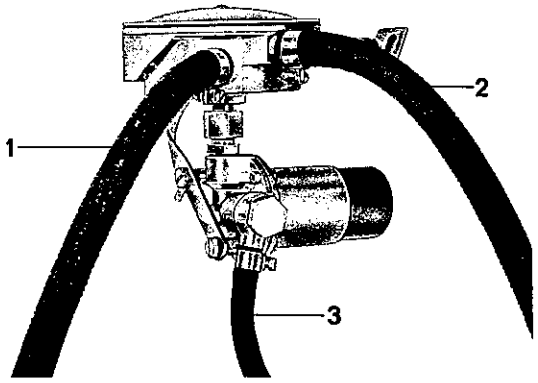

1 Fuel mixture hose, ca. 95 cm long
2 Air supply hose, 60 cm long
3 Fuel hose

14. Install fuel pump with metering unit. Secure blue/yellow wire to pump, and connect 2-pole ground wire.

15. Remove plug from fuel hose passage in floor panel and insert grommet.

16. Lead fuel hose through the forwardmost passage, inserting it from the top and leading into the hole and grommet in the floor panel.

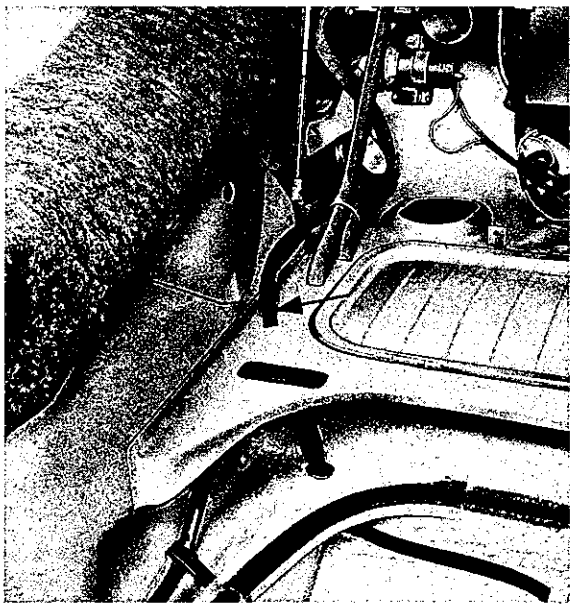

17. Remove undershield from auxiliary crossmember.

18. Drain fuel tank and remove.

19. Remove right blind plug from fuel tank and connect fuel line.

20. Install fuel tank and slide hoses onto fittings.

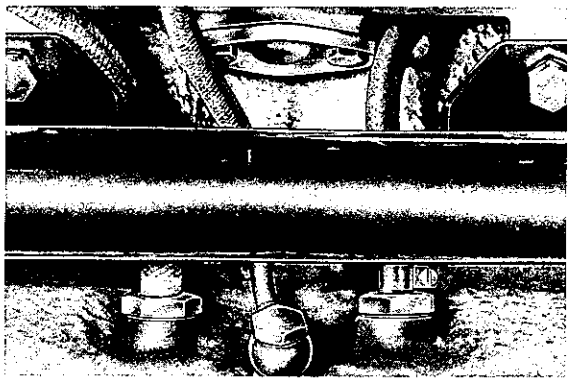

21. Install undershield at the auxiliary cross-member.

22. Cut instrument panel lining for actuating switch (left side, adjacent to fresh air control).

23. Secure spark generator to stud. Secure a ground connecting tab to the lower retaining bolt and attach ground wire from wire loom to it.

24. Install heater unit support (with rubber grommets and bushings).

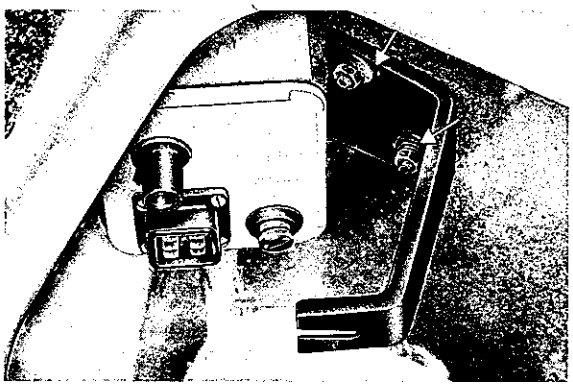

25. Install fuel mixture and air supply hoses. Connect blue wire from wire loom with the already installed blue wire in the luggage compartment.

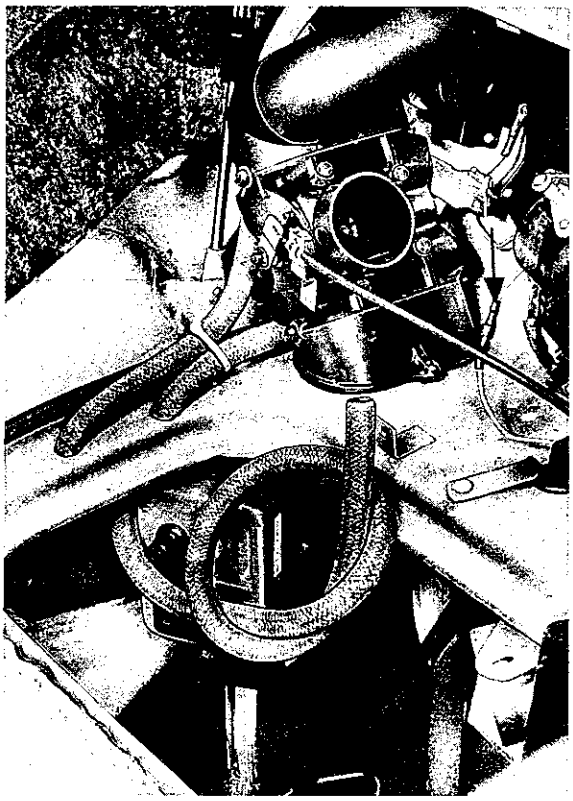

26. Remove glued on cover plate in luggage compartment floor, covering duct flange, and exhaust gas outlet cover in the heater box.

27. Rivet duct flange to thermo-gate.

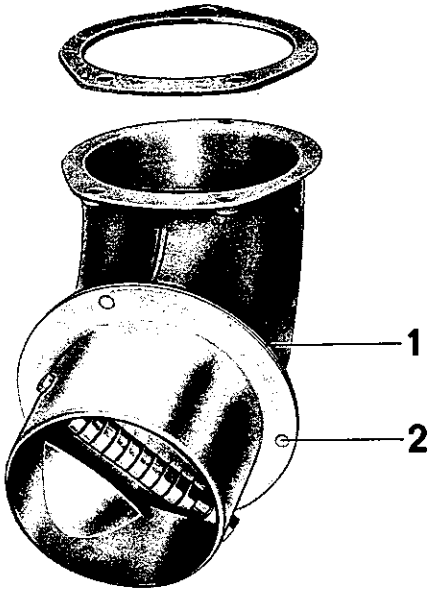

1 Gasket 2 Rivet

28. Install complete duct flange and connect Y-piece.

29. Install right control box. Install air hoses with junction piece, and hot air hoses right and left (contained in kit).

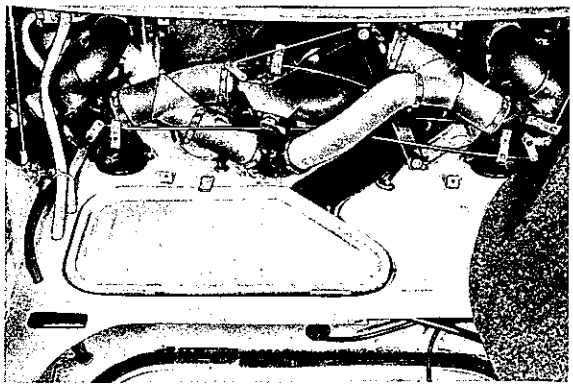

30. Install sealing ring with screen for air intake flange, with bulge facing down, in the opening leading to the passenger compartment.

31. Install heater unit, making sure that the blower intake flange seats properly in the rubber sealing ring. Secure heater to supporting bracket.

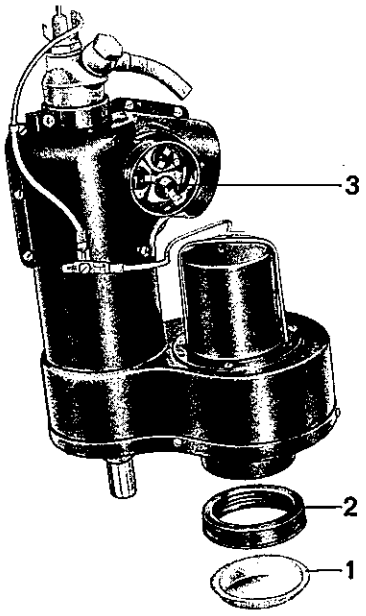

1 Screen 2 Sealing ring 3 Thermostats

32. Connect multiple connector to spark generator.

33. Attach high tension cable to the connector in spark generator and on the glow plug.

34. Connect wire loom wires (with rubber boot) to safety switch (3 thermostats) as follows:

Qty	Cable color code	Onto terminal with color marker
2	Red	Red
2	Blue	Blue
1	White	White
1	Blue as bridge	White

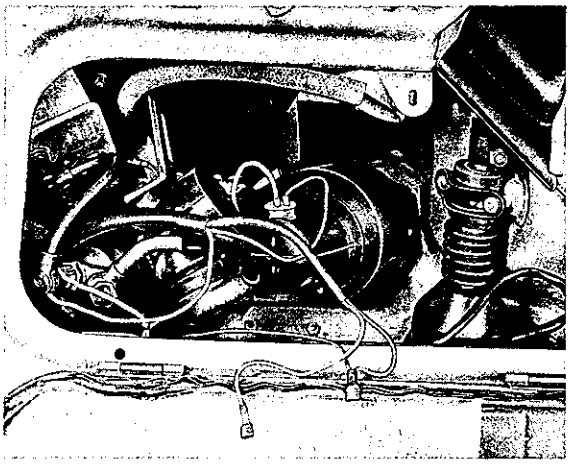

35. Connect hot air duct from heater to Y-section and fasten with hose clamps.

36. Attach mixture pump to support and screw motor safety switch on.

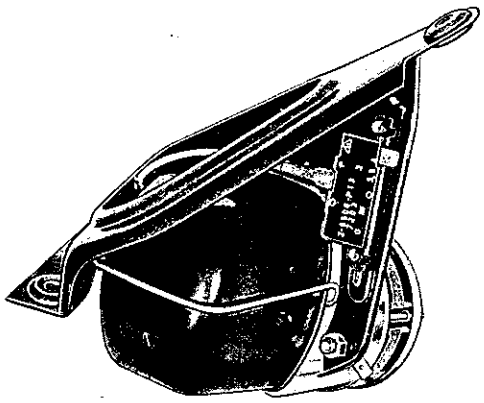

37. Secure ground connecting tab to pump housing and connect blue/green connecting wire (motor to motor safety switch).

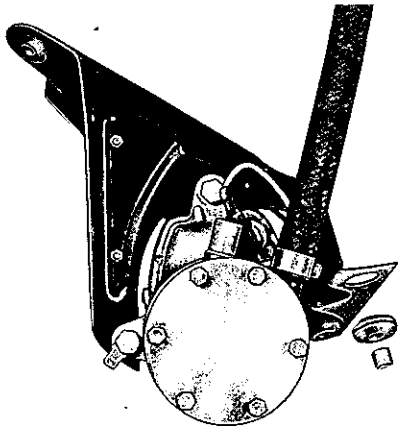

38. Secure complete unit with three M 6 bolts (remove 2 plastic stoppers first).

39. Push mixture hoses onto mixture pump. Seen in driving direction, the short hose (19 cm) is in front and the long hose at rear. Secure with hose clamps.

40. Connect short mixture hoses to burner head.

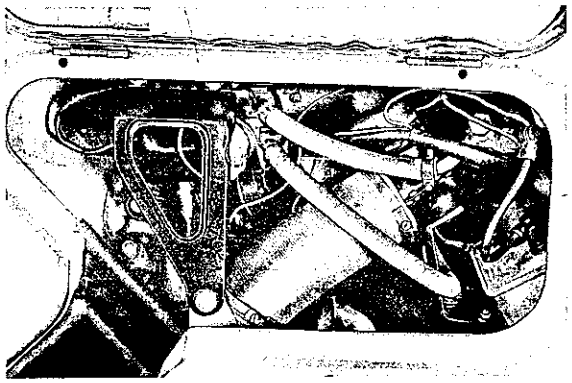

41. Install control lamp in the heating and ventilation control unit, connect brown wire to ground.

42. Connect heater actuating switch and mount on instrument panel. Attach yellow/red wire and black wire to one terminal, blue wire and yellow/red wire to the other terminal.

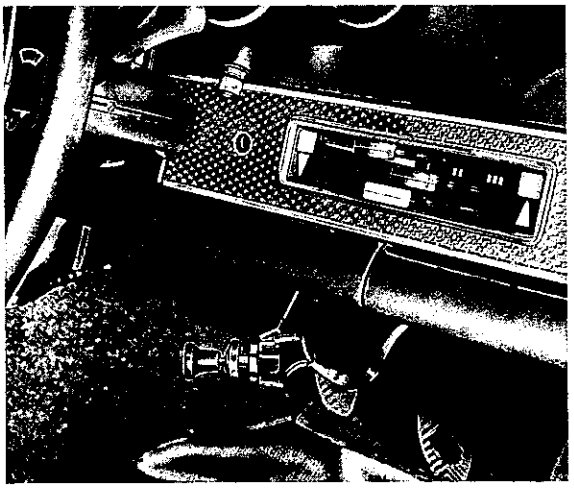

43. Connect brown ground wires from wire loom as follows:
    a. Two-pole wire to fuel pump
    b. To spark generator
    c. To blower housing of heater
    d. To mixture pump

44. Connect remaining wires as follows:

yellow	to glow plug
blue/yellow	to motor safety relay
blue	to heater (blower motor)

45. Install a 25 A fuse in fuse box N° 1, fuse position N° 4.

46. Install 2 muffler brackets on right vehicle underside using sheetmetal screws.

47. Install 3 attaching clips on right vehicle underside, fastening with 2 pop rivets each, and one clip on side of longitudinal member.

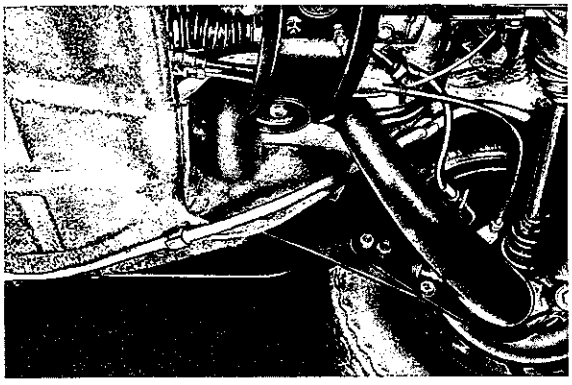

48. Push white plastic bushings onto both ends of the muffler. Connect exhaust pipe and attach to brackets with hose clamps.

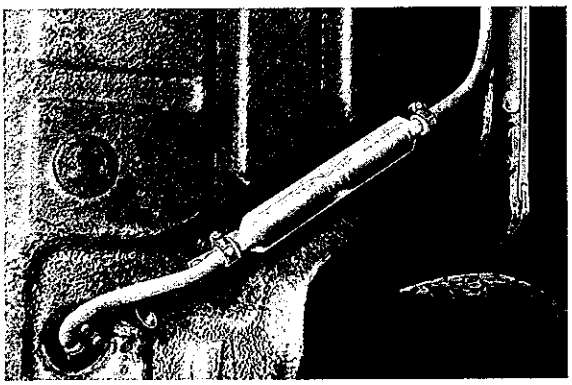

49. Assemble muffler and exhaust pipe.

50. Install long exhaust pipe along the right vehicle side.

51. Place 4 elastic bushings onto the exhaust pipe and fasten exhaust pipe by bending the attaching clips.

52. Connect batteries.

53. Check heater for proper functioning and all fuel lines for leaks.

WIRING DIAGRAM FOR WEBASTO P 1018.04 AUXILIARY HEATER

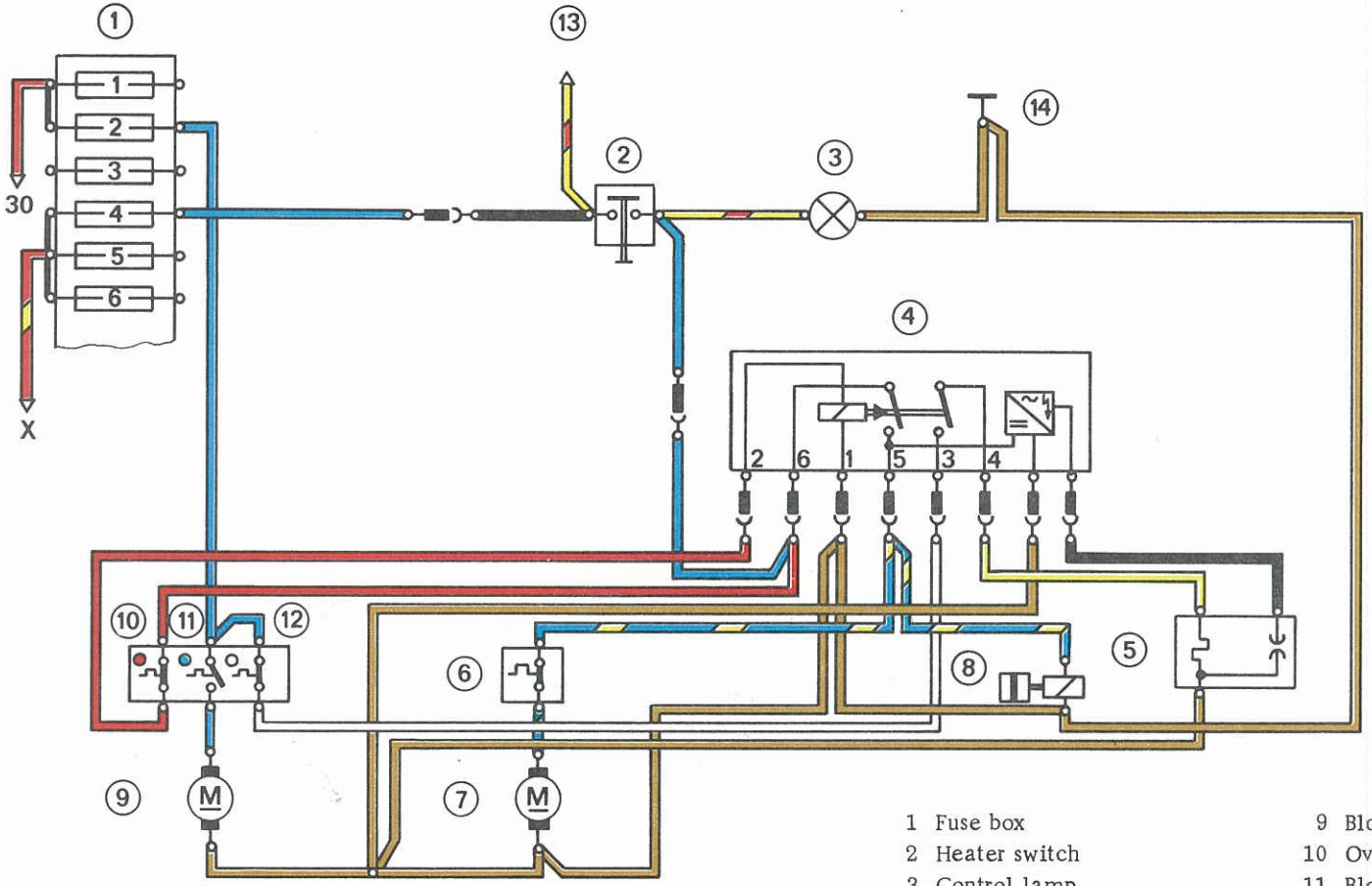

1 Fuse box
2 Heater switch
3 Control lamp
4 Sparg generator
5 Glow/spark plug
6 Motor safety switch
7 Mixture pump
8 Metering unit with fuel pump
9 Blower motor
10 Overheat thermostat
11 Blower thermostat
12 Glow control thermostat
13 Blower switch
14 Ground